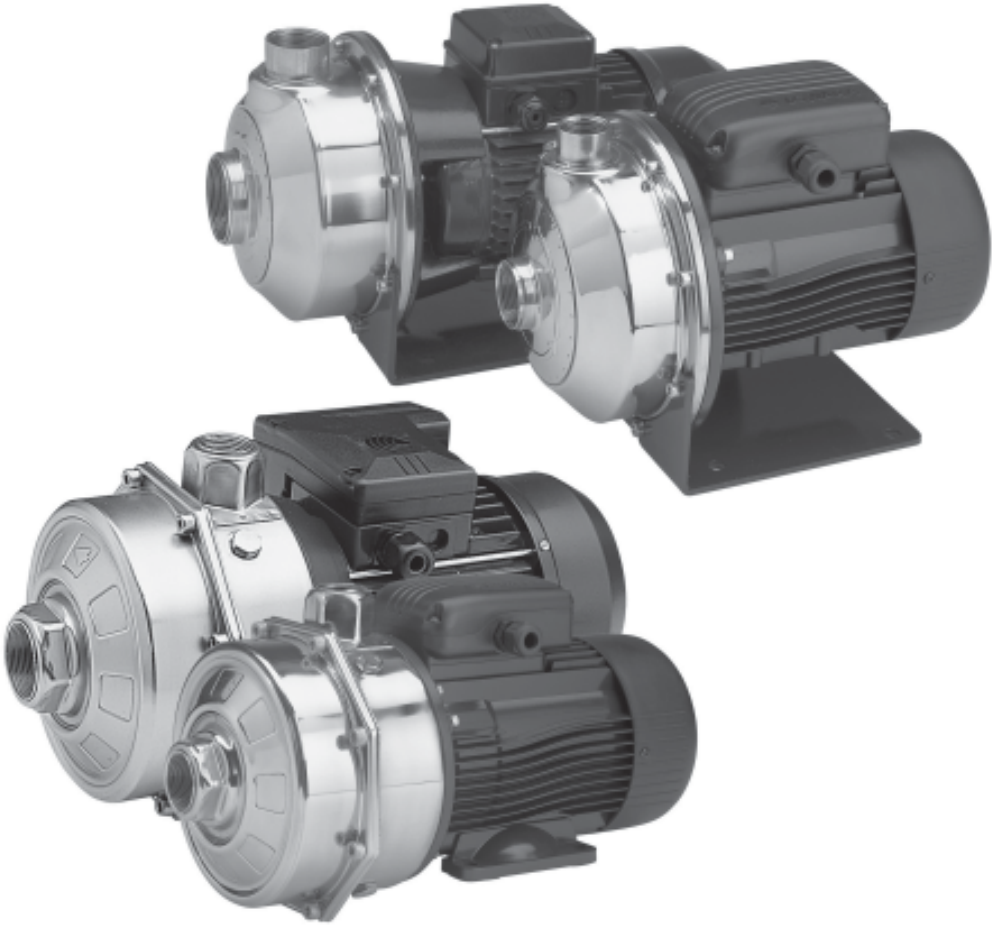

**50 Hz**

# CEA-CA Series
# CEA(N)-CA(N) made of AISI 316

SINGLE AND TWIN-IMPELLER CENTRIFUGAL ELECTRIC PUMPS
EQUIPPED WITH IE2/IE3 MOTORS COMPLYING WITH REGULATION (EC) n. 640/2009

Cod. 191003881 Rev.C Ed.10/2012

LOWARA
a xylem brand

LOWARA
a xylem brand

## CEA-CA - CEA(N)-CA(N) SERIES
## HYDRAULIC PERFORMANCE RANGE AT 50 Hz

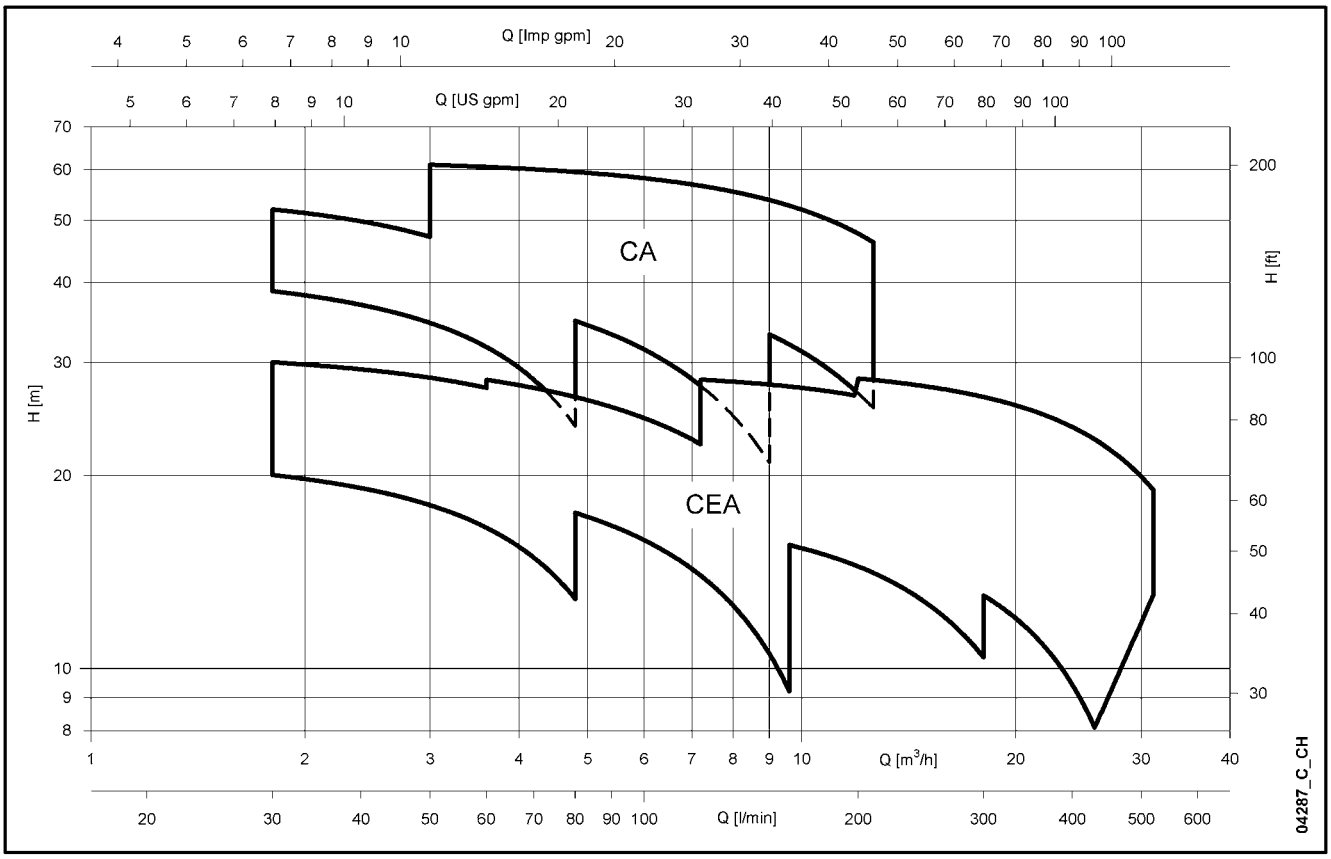

## CEA-CEA(N) SERIES
## HYDRAULIC PERFORMANCE TABLE AT 50 Hz, 2 POLES

| PUMP TYPE | RATED POWER | | Q = DELIVERY | | | | | | | | | | | | | | | | | |
|---|---|---|---|---|---|---|---|---|---|---|---|---|---|---|---|---|---|---|---|---|
| | | | l/min 0 | 30 | 40 | 60 | 80 | 100 | 120 | 140 | 160 | 180 | 200 | 250 | 300 | 350 | 400 | 430 | 480 | 520 |
| | | | $m^3/h$ 0 | 1,8 | 2,4 | 3,6 | 4,8 | 6 | 7,2 | 8,4 | 9,6 | 10,8 | 12 | 15 | 18 | 21 | 24 | 26 | 29 | 31 |
| | kW | HP | H = TOTAL HEAD METRES COLUMN OF WATER | | | | | | | | | | | | | | | | | |
| CEA(M) 70/3 | 0,37 | 0,5 | 22 | 20,1 | 19,1 | 16,6 | 12,8 | | | | | | | | | | | | | |
| CEA(M) 70/5 | 0,55 | 0,75 | 31,1 | 28,8 | 27,7 | 24,7 | 20,2 | | | | | | | | | | | | | |
| CEA(M) 80/5 | 0,75 | 1 | 32 | 30 | 29,3 | 27,4 | 24,7 | 21 | | | | | | | | | | | | |
| CEA(M) 120/3 | 0,55 | 0,75 | 22,4 | | | 18,9 | 17,5 | 15,9 | 14 | 11,8 | 9,2 | | | | | | | | | |
| CEA(M) 120/5 | 0,9 | 1,2 | 31,8 | | | 28,2 | 26,5 | 24,6 | 22,4 | 20 | 17,3 | | | | | | | | | |
| CEA(M) 210/2 | 0,75 | 1 | 17,7 | | | | | | 16,5 | 16,1 | 15,6 | 15 | 14,4 | 12,6 | 10,4 | | | | | |
| CEA(M) 210/3 | 1,1 | 1,5 | 20,8 | | | | | | 19,7 | 19,3 | 19 | 18,5 | 18 | 16,5 | 14,4 | | | | | |
| CEA(M) 210/4 | 1,5 | 2 | 25,5 | | | | | | 24,8 | 24,5 | 24 | 23,6 | 23 | 21,3 | 19 | | | | | |
| CEA(M) 210/5 | 1,85 | 2,5 | 29 | | | | | | 28,2 | 27,9 | 27,5 | 27,1 | 26,6 | 25,1 | 23,1 | | | | | |
| CEA(M) 370/1 | 1,1 | 1,5 | 16,3 | | | | | | | | | 15,5 | 15,2 | 14,3 | 13 | 11,4 | 9,4 | 8,1 | | |
| CEA(M) 370/2 | 1,5 | 2 | 20,4 | | | | | | | | | | 19,1 | 18,3 | 17,2 | 15,8 | 14,1 | 13 | 10,8 | |
| CEA(M) 370/3 | 1,85 | 2,5 | 24,4 | | | | | | | | | | 22,9 | 22,1 | 21,1 | 19,8 | 18,2 | 17,1 | 15 | 13 |
| CEA370/5 | 3 | 4 | 30,3 | | | | | | | | | | 28,3 | 27,5 | 26,5 | 25,3 | 23,8 | 22,8 | 21 | 19,0 |

cea-2p50-en_d_th

## CEA-CEA(N) SERIES
## ELECTRICAL DATA AT 50 Hz, 2 POLES

| PUMP TYPE 1 ~ | MOTOR TYPE | INPUT POWER* kW | INPUT CURRENT* 220-240 V A | CAPACIT. µF / 450 V |
|---|---|---|---|---|
| CEAM70/3 | SM63BG/1045 | 0,60 | 2,72 | 14 |
| CEAM70/5 | SM71BG/1055 | 0,97 | 4,55 | 16 |
| CEAM80/5 | SM71BG/1075 | 1,07 | 4,87 | 20 |
| CEAM120/3 | SM71BG/1055 | 0,91 | 4,33 | 16 |
| CEAM120/5 | SM71BG/1095 | 1,39 | 6,24 | 25 |
| CEAM210/2 | SM71BG/1075 | 1,13 | 5,10 | 20 |
| CEAM210/3 | SM80BG/1115 | 1,48 | 6,68 | 30 |
| CEAM210/4 | SM80BG/1155 | 1,91 | 8,60 | 40 |
| CEAM210/5 | PLM90BG/1225 | 2,24 | 10,2 | 70 |
| CEAM370/1 | SM80BG/1115 | 1,49 | 6,75 | 30 |
| CEAM370/2 | SM80BG/1155 | 2,05 | 9,26 | 40 |
| CEAM370/3 | PLM90BG/1225 | 2,45 | 11,1 | 70 |
| | | | | |

| PUMP TYPE 3 ~ | MOTOR TYPE | INPUT POWER* kW | INPUT CURRENT* 220-240 V A | INPUT CURRENT* 380-415 V A |
|---|---|---|---|---|
| CEA70/3 | SM63BG/304 | 0,61 | 2,51 | 1,45 |
| CEA70/5 | SM71BG/305 | 0,88 | 2,86 | 1,65 |
| CEA80/5 | SM80BG/307PE | 0,98 | 3,08 | 1,78 |
| CEA120/3 | SM71BG/305 | 0,82 | 2,74 | 1,58 |
| CEA120/5 | SM80BG/311PE | 1,28 | 4,10 | 2,37 |
| CEA210/2 | SM80BG/307PE | 1,04 | 3,22 | 1,86 |
| CEA210/3 | SM80BG/311PE | 1,35 | 4,24 | 2,45 |
| CEA210/4 | SM80BG/315PE | 1,73 | 5,46 | 3,15 |
| CEA210/5 | PLM90BG/322 | 2,20 | 7,35 | 4,24 |
| CEA370/1 | SM80BG/311PE | 1,40 | 4,35 | 2,51 |
| CEA370/2 | SM80BG/315PE | 1,95 | 5,94 | 3,43 |
| CEA370/3 | PLM90BG/322 | 2,45 | 7,84 | 4,53 |
| CEA370/5 | PLM90BG/330 | 3,26 | 10,1 | 5,86 |

*Maximum value in specified range.

cea-2p50-en_f_te

## CEA-CEA(N) SERIES
## HYDRAULIC PERFORMANCE RANGE AT 50 Hz, 2 POLES

| CEA | ~ 2850 [rpm] | ISO 9906 - Annex A |
|---|---|---|

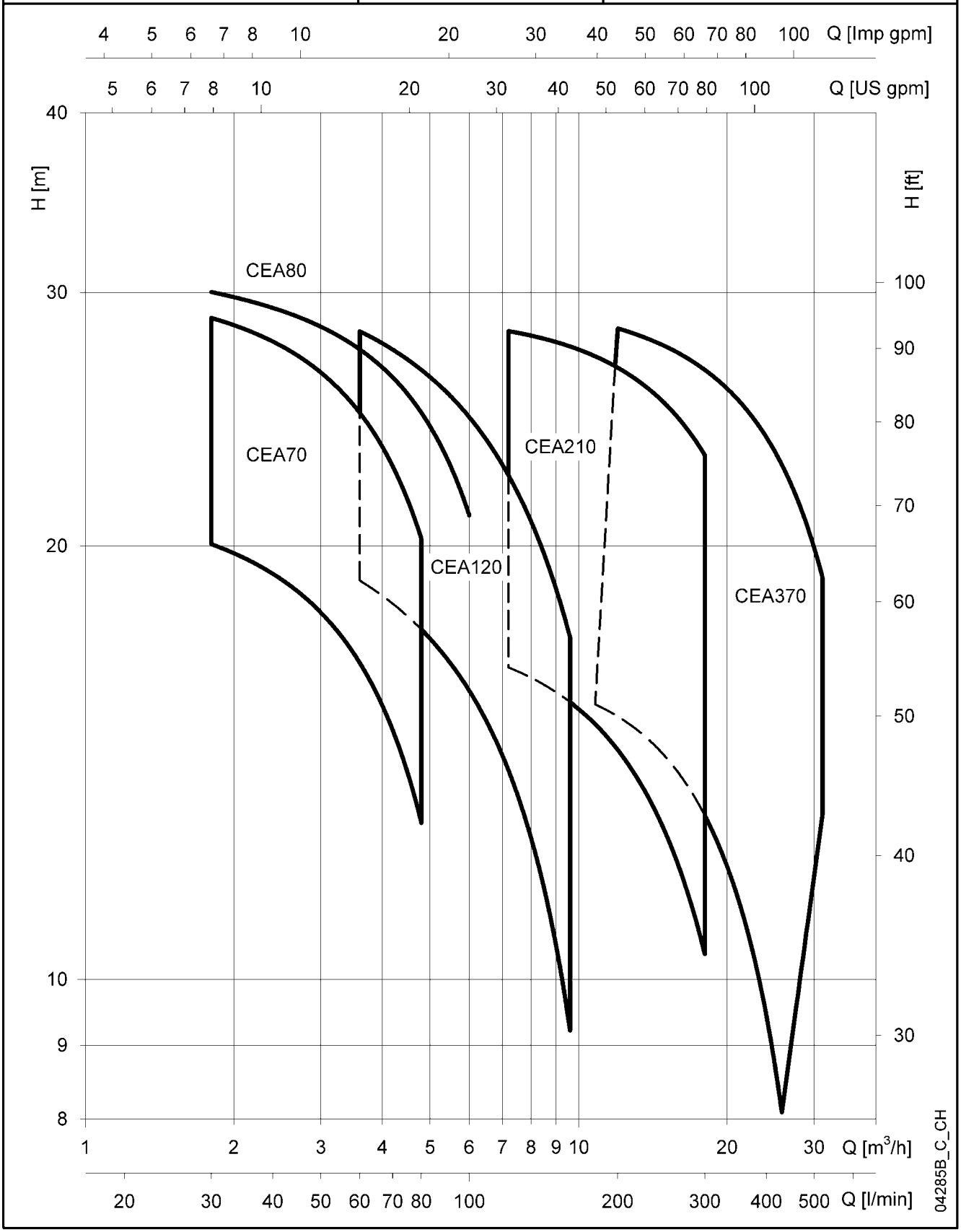

## CEA210 SERIES
## OPERATING CHARACTERISTICS AT 50 Hz, 2 POLES

| CEA210 | ~ 2850 [rpm] | ISO 9906 - Annex A |
|---|---|---|

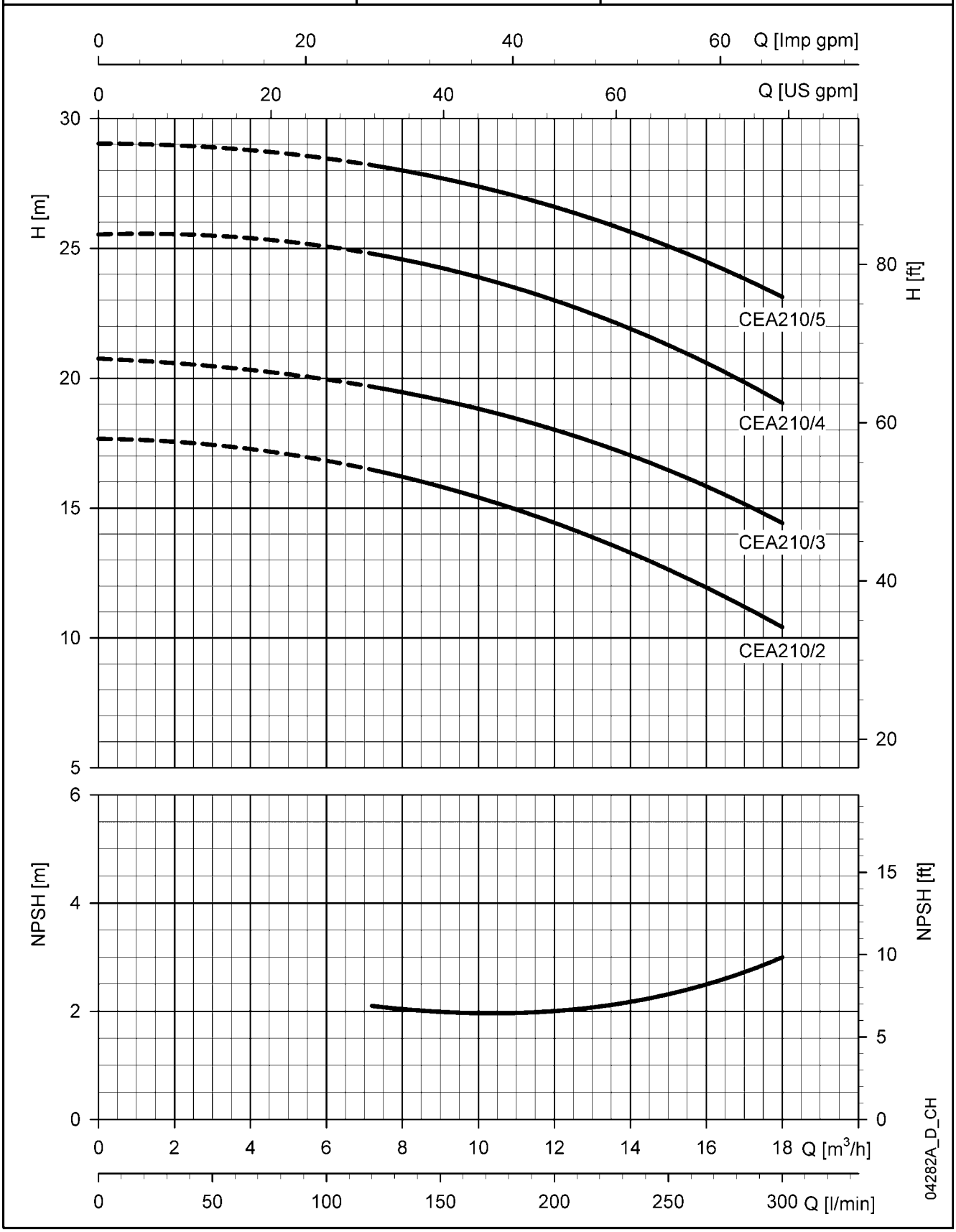


These performances are valid for liquids with density ρ = 1.0 Kg/dm³ and kinematic viscosity ν = 1 mm²/sec.

# CEA-CEA(N) SERIES
# DIMENSIONS AND WEIGHTS AT 50 Hz, 2 POLES

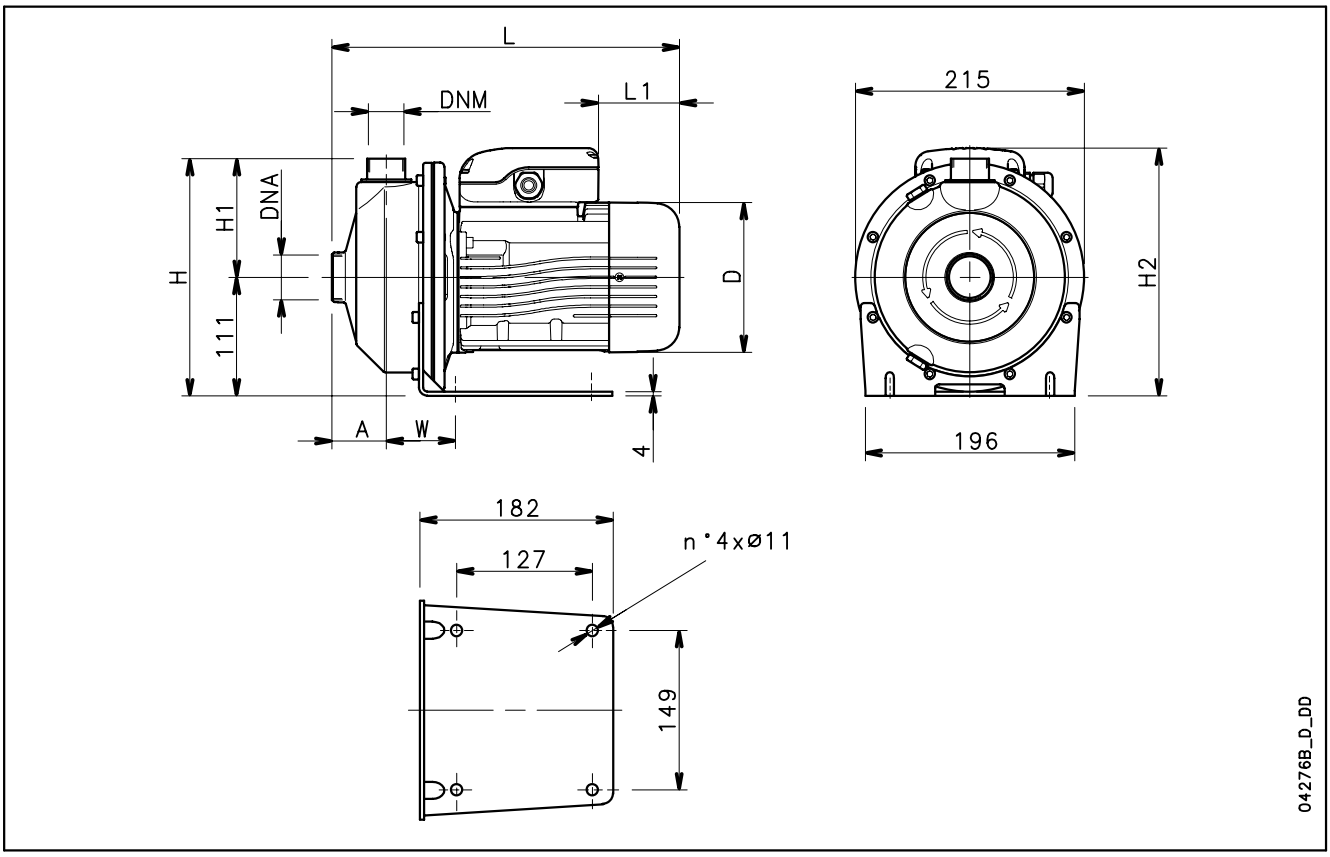


| PUMP TYPE | DIMENSIONS (mm | | | | | | | | DNA | DNM | WEIGHT |
|---|---|---|---|---|---|---|---|---|---|---|---|
| | A | D | H | H1 | H2 | L | L1 | W | | | kg |
| CEAM 70/3/A | 51 | 120 | 222 | 111 | 222 | 311 | 62 | 65 | Rp 1¼ | Rp 1 | 9,7 |
| CEAM 70/5/A | 51 | 140 | 222 | 111 | 232 | 325 | 76 | 65 | Rp 1¼ | Rp 1 | 11,6 |
| CEAM 80/5/A | 51 | 140 | 222 | 111 | 232 | 325 | 76 | 65 | Rp 1¼ | Rp 1 | 12,5 |
| CEAM 120/3/A | 51 | 140 | 222 | 111 | 232 | 325 | 76 | 65 | Rp 1¼ | Rp 1 | 11,5 |
| CEAM 120/5/A | 51 | 140 | 222 | 111 | 241 | 325 | 31 | 65 | Rp 1¼ | Rp 1 | 13 |
| CEAM 210/2/A | 54 | 140 | 224 | 113 | 232 | 339 | 76 | 76 | Rp 1½ | Rp 1¼ | 13 |
| CEAM 210/3/A | 54 | 156 | 224 | 113 | 248 | 385 | 69 | 76 | Rp 1½ | Rp 1¼ | 14,5 |
| CEAM 210/4/A | 54 | 156 | 224 | 113 | 248 | 385 | 69 | 76 | Rp 1½ | Rp 1¼ | 16,1 |
| CEAM 210/5/P | 54 | 174 | 224 | 113 | 262 | 429 | 84 | 76 | Rp 1½ | Rp 1¼ | 17 |
| CEAM 370/1/A | 54 | 156 | 224 | 113 | 248 | 385 | 69 | 76 | Rp 2 | Rp 1¼ | 14 |
| CEAM 370/2/A | 54 | 156 | 224 | 113 | 248 | 385 | 69 | 76 | Rp 2 | Rp 1¼ | 16,1 |
| CEAM 370/3/P | 54 | 174 | 224 | 113 | 262 | 429 | 84 | 76 | Rp 2 | Rp 1¼ | 20 |
| CEA 70/3/A | 51 | 120 | 222 | 111 | 222 | 311 | 62 | 65 | Rp 1¼ | Rp 1 | 9,7 |
| CEA 70/5/A | 51 | 140 | 222 | 111 | 232 | 325 | 76 | 65 | Rp 1¼ | Rp 1 | 11,6 |
| CEA 80/5/D | 51 | 155 | 222 | 111 | 240 | 371 | 114 | 65 | Rp 1¼ | Rp 1 | 14,4 |
| CEA 120/3/A | 51 | 140 | 222 | 111 | 232 | 325 | 76 | 65 | Rp 1¼ | Rp 1 | 11,5 |
| CEA 120/5/D | 51 | 155 | 222 | 111 | 240 | 371 | 114 | 65 | Rp 1¼ | Rp 1 | 14,6 |
| CEA 210/2/D | 54 | 155 | 224 | 113 | 240 | 385 | 114 | 76 | Rp 1½ | Rp 1¼ | 14,6 |
| CEA 210/3/D | 54 | 155 | 224 | 113 | 240 | 385 | 114 | 76 | Rp 1½ | Rp 1¼ | 16,4 |
| CEA 210/4/D | 54 | 155 | 224 | 113 | 240 | 385 | 114 | 76 | Rp 1½ | Rp 1¼ | 17,9 |
| CEA 210/5/C | 54 | 174 | 224 | 113 | 245 | 429 | 172 | 76 | Rp 1½ | Rp 1¼ | 21 |
| CEA 370/1/D | 54 | 155 | 224 | 113 | 240 | 385 | 114 | 76 | Rp 2 | Rp 1¼ | 15,8 |
| CEA 370/2/D | 54 | 155 | 224 | 113 | 240 | 385 | 114 | 76 | Rp 2 | Rp 1¼ | 17,9 |
| CEA 370/3/C | 54 | 174 | 224 | 113 | 245 | 429 | 172 | 76 | Rp 2 | Rp 1¼ | 21 |
| CEA 370/5/P | 54 | 174 | 224 | 113 | 245 | 429 | 172 | 76 | Rp 2 | Rp 1¼ | 21 |

cea-2p50-en_h_td