BPH / BMH / DPH / DMH

WET ROTOR CIRCULATORS

DPH - DMH

BPH - BMH

ONLY FOR EXTRA MARKETS EU

TECHNICAL DATA

Operating range: from 1,5 a 78 m^3/h with head of up to 18 metres.
Liquid temperature range: for three-phase version: from -10°C to +120°C (for the models BPH-DPH 150/340.65 T and BPH-DPH 150/360.80 T; BPH-DPH 150-180/280.50 T; BPH-DPH 180/340.65 T; BPH-DPH 180/360.80 T: from -10°C to +110°C).
Pumped liquid: clean, free of solids and mineral oils, non-viscous, chemically neutral, with properties similar to water. (glycol max 30%).
Maximum operating pressure: 10 bar (1000 kPa).
Standard flanges: DN 80 in PN 6 / PN 10 (4 holes).
Minimum suction pressure: the values are shown in the corresponding tables.
Installation: with HORIZONTAL MOTOR AXIS, on the delivery or return piping, with the suction port as close as possible to the expansion vessel, above the level of the boiler and as far as possible from bends, elbows, branches, to avoid water turbulence, and the consequent noise.
Special executions on requests: alternative voltages and frequencies. DN 80 in PN 10 / PN 16 (8 holes) flange.
Accessories: DN 40, DN 50, DN 65, DN 80 in PN 6 / PN 10 (4 slots).

APPLICATIONS

Pump for the circulation of water in residential and industrial collective heating and air conditioning systems. All the models are available both in the single and twin version.

CONSTRUCTION FEATURES

Single body consisting of the cast iron hydraulic section, and the wet rotor motor.
Aluminium motor casing. Flanged suction and delivery ports with threaded connectors for control manometers. Technopolymer impeller, tempered stainless steel motor shaft on graphite bushings lubricated by the pumped liquid. Stainless steel rotor protection liner and stator liner. Ceramic thrust ring, ethylene-propylene seal rings, and brass air breather plug. Asynchronous four-pole motor for the BMH and DMH versions, two poles for the BPH and DPH versions. The single-phase circulator has been designed for three-speed operation at 230 V, while the three-phase circulator has been designed for two-speed operation at 230 V, and 3-speed operation at 400 V. In both cases, the speed is adjusted through a special selector in the terminal box, in order to adapt the operation of the circulator to the characteristics of the system.
Built-in thermal protection in the single-phase version. For the three-phase version, the motor must be connected to the power input using an external contactor. The contactor must be connected to the thermal protection built in the motor, in order to protect it from overload at all speeds.
The twin version features an automatic swing check valve incorporated in the delivery port, to avoid water recirculating through the unit when this is not running; in addition, a blank flange is also supplied as standard, to allow either of the two motors to be removed for servicing. The standard execution of the pump body is in PN 10, compatible with PN 6 pumps to ensure interchangeability of the pumps in existing systems.
Circulator protection class: IP 44 for both the single-phase and the three-phase version
Insulation class: H - Cable gland: PG 11
Standard voltage: three-phase 230/400 V, 50 Hz
Product compliant with European Standards EN 60335-2-51

MATERIALS

N.	PARTS	MATERIALS
1	PUMP BODY	CAST IRON 200 UNI ISO 185
4	IMPELLER	TECHNOPOLYMER B
7A	MOTOR SHAFT	AISI 420 C QUENCHED AND TEMPERED STAINLESS STEEL
7B	ROTOR	-
8	STATOR	-
10	MOTOR CASING	DIE-CAST ALUMINIUM
11	BREATHER PLUG	BRASS P Cu Zn 40 Pb2 UNI 5705
100	TERMINAL BOX	-
127	SEAL RING	ETHYLENE PROPYLENE (EPDM)
128	STATOR LINER	AISI 321 STAINLESS STEEL AISI 304 - QUENCED AND TEMPERED
129	ROTOR LINER	AISI 321 STAINLESS STEEL AISI 304 - QUENCED AND TEMPERED
130	CLOSING FLANGE	CAST IRON 200 UNI ISO 185
131	THRUST RING SUPPORT	AISI 304 L STAINLESS STEEL
132	BUSHINGS	EC 941 CARBON

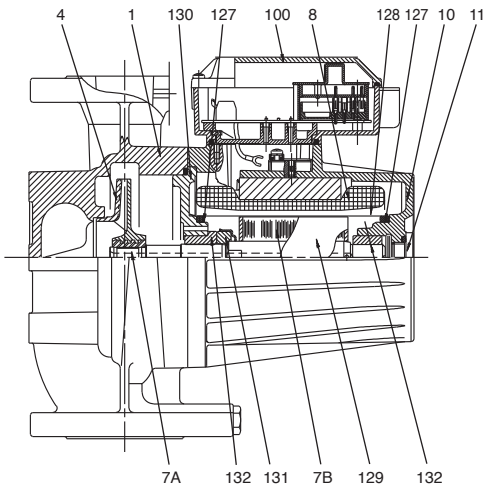

MOTOR MOB

– Legend:
(example)

B P H 120 / 250 . 40 T

B = single circulator
D = twin circulator

M = 4-pole motor
P = 2-pole motor

H = suitable for both air conditioning and heating

maximum head (dm)

centre distance (mm)

(DN) nominal diameter of flanged ports

M = single-phase motor
T = three-phase motor

TERMINAL BOX POSITION

SINGLE

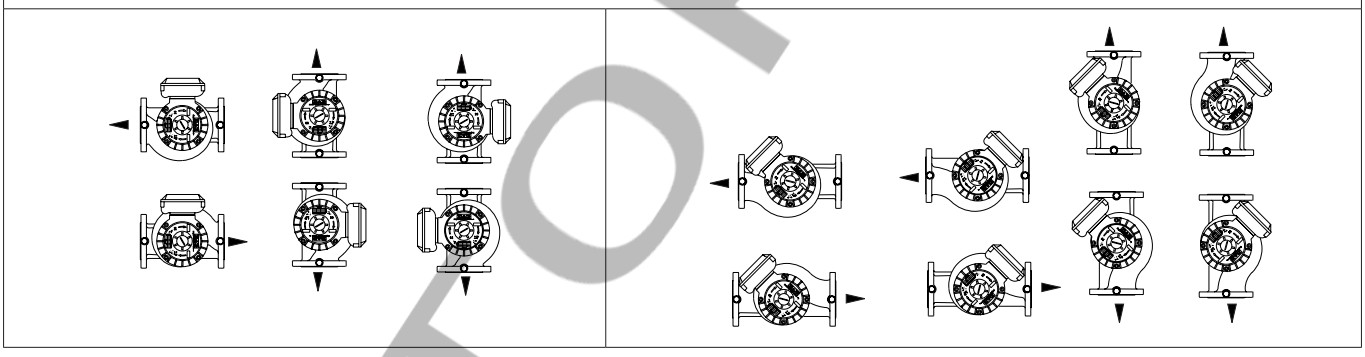

TWIN

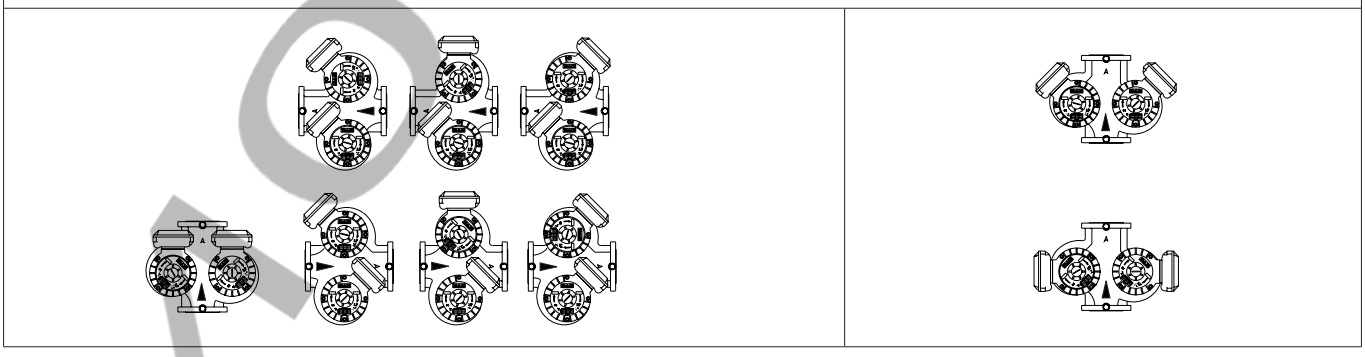

MOTOR MOB

PERFORMANCE RANGE

The performance curves are based on kinematic viscosity values = 1 mm²/s and density equal to 1000 kg/m³. Curve tolerance according to ISO 9906.

GRAPHIC SELECTION TABLE

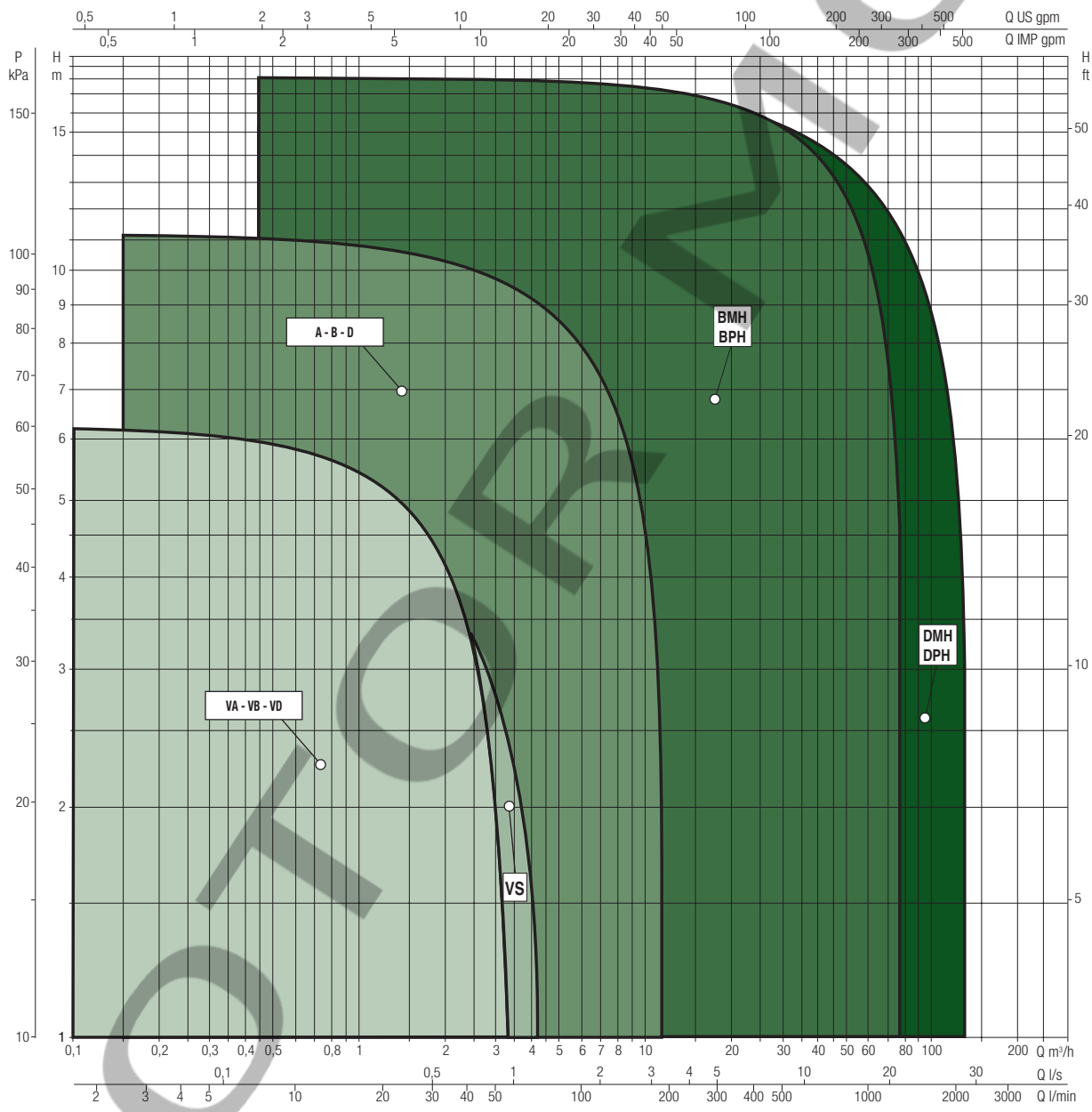

MOTOR MOB

SELECTION TABLE - BPH / BMH

MODEL	Q=m³/h	0	1,8	2,4	3	4,2	5,4	7,2	9,6	12	14,4	18	24	30	36	42	54	72
	Q=l/min	0	30	40	50	70	90	120	160	200	240	300	400	500	600	700	900	1200
BMH 30/250.40 T		3,3	3,1	2,95	2,85	2,5	2,1	1,15										
BPH 60/250.40 M		7,2	6,8	6,7	6,5	6,2	5,8	5	3,7	2								
BPH 60/250.40 T		7,65	7,4	7,3	7,2	6,8	6,4	5,45	3,9	2,25								
BPH 120/250.40 M		11	10,3	10,1	9,8	9,2	8,6	7,65	6,2	4,35	2,4							
BPH 120/250.40 T		12		11	10,7	10,1	9,5	8,4	6,8	4,7	2,2							
BMH 30/280.50 T		3,15		3,02	3	2,93	2,85	2,65	2,3	1,75	1,2							
BMH 60/280.50 T		5,83		5,65	5,6	5,49	5,35	5,1	4,75	4,2	3,65	2,62						
BPH 60/280.50 M		7,65	7,5	7,45	7,4	7,3	7,2	6,98	6,7	6,2	5,75	4,6	2,3					
BPH 60/280.50 T		7,95		7,75	7,7	7,6	7,5	7,35	6,92	6,45	5,85	4,65	2,4					
BPH 120/280.50 M		11,3				10,8	10,5	10,3	9,9	9,4	8,5	7,2	4,8	2,1				
BPH 120/280.50 T		11,7				11,3	11	10,75	10,25	9,6	8,9	7,75	5,4	2,6				
BPH 150/280.50 T		15				14,6	14,4	14	13,6	12,7	11,8	10,5	7,5					
BPH 180/280.50 T		18,4						17,4	17	16,4	15,6	14,4	12	8,8	5,2			
BMH 30/340.65 T	H (m)	3,15				3,09	3,02	2,98	2,85	2,55	2,25	1,65						
BMH 60/340.65 T		5,4				5,15	5,05	4,9	4,7	4,45	4,1	3,45	2,25					
BPH 60/340.65 M		6,8	6,79	6,75	6,7	6,6	6,57	6,5	6,35	6,2	5,95	5,5	4,35	2,85	1,2			
BPH 60/340.65 T		7,4				7,35	7,3	7,24	7,1	6,9	6,65	6,15	4,9	3,3	1,4			
BPH 120/340.65 T		10,9				10,75	10,68	10,6	10,5	10,38	10,2	9,8	8,7	7,15	5,2	3		
BPH 150/340.65 T		14,9				14,88	14,83	14,75	14,65	14,55	14,3	13,88	12,65	11	9,35	7,15		
BPH 180/340.65 T		17,9						17,8	17,7	17,5	17,3	16,8	15,7	14,1	12,1	10		
BMH 30/360.80T		3,9						3,85	3,8	3,75	3,65	3,48	3,1	2,45	1,75			
BMH 60/360.80T		5,7						5,66	5,61	5,59	5,5	5,4	5	4,55	3,9	3,1		
BPH 120/360.80 T		11,8						11,65	11,58	11,5	11,4	11,25	10,75	10,2	9,39	8,37	5,65	
BPH 150/360.80 T		15,3						15,1	15,06	14,99	14,92	14,75	14,5	14	13,4	12,4	10,3	6
BPH 180/360.80 T		17,5						17,4	17,25	17,1	16,8	16,25	15	13,7	12	10,1	5,5	

SELECTION TABLE - DPH / DMH

MODEL	Q=m³/h	0	1,8	2,4	3	4,2	5,4	7,2	9,6	12	14,4	18	24	30	36	42	54	72
	Q=l/min	0	30	40	50	70	90	120	160	200	240	300	400	500	600	700	900	1200
DMH 30/250.40 T		3,3	3,1	2,95	2,85	2,5	2,1	1,15										
DPH 60/250.40 M		7,2	6,8	6,7	6,5	6,2	5,8	5	3,7	2								
DPH 60/250.40 T		7,65	7,4	7,3	7,2	6,8	6,4	5,45	3,9	2,25								
DPH 120/250.40 M		11	10,3	10,1	9,8	9,2	8,6	7,65	6,2	4,35	2,4							
DPH 120/250.40 T		12		11	10,7	10,1	9,5	8,4	6,8	4,7	2,2							
DMH 30/280.50 T		3,15		3,02	3	2,93	2,85	2,65	2,3	1,75	1,2							
DMH 60/280.50 T		5,83		5,65	5,6	5,49	5,35	5,1	4,75	4,2	3,65	2,62						
DPH 60/280.50 M		7,65	7,5	7,45	7,4	7,3	7,2	6,98	6,7	6,2	5,75	4,6	2,3					
DPH 60/280.50 T		7,95		7,75	7,7	7,6	7,5	7,35	6,92	6,45	5,85	4,65	2,4					
DPH 120/280.50 M		11,3				10,8	10,5	10,3	9,9	9,4	8,5	7,2	4,8	2,1				
DPH 120/280.50 T		11,7				11,3	11	10,75	10,25	9,6	8,9	7,75	5,4	2,6				
DPH 150/280.50 T		15				14,6	14,4	14	13,6	12,7	11,8	10,5	7,5					
DPH 180/280.50 T		18,4						17,4	17	16,4	15,6	14,4	12	8,8	5,2			
DMH 30/340.65 T	H (m)	3,15				3,09	3,02	2,98	2,85	2,55	2,25	1,65						
DMH 60/340.65 T		5,4				5,15	5,05	4,9	4,7	4,45	4,1	3,45	2,25					
DPH 60/340.65 M		6,8	6,79	6,75	6,7	6,6	6,57	6,5	6,35	6,2	5,95	5,5	4,35	2,85	1,2			
DPH 60/340.65 T		7,4				7,35	7,3	7,24	7,1	6,9	6,65	6,15	4,9	3,3	1,4			
DPH 120/340.65 T		10,9				10,75	10,68	10,6	10,5	10,38	10,2	9,8	8,7	7,15	5,2	3		
DPH 150/340.65 T		14,9				14,88	14,83	14,75	14,65	14,55	14,3	13,88	12,65	11	9,35	7,15		
DPH 180/340.65T		17,9						17,8	17,7	17,5	17,3	16,8	15,7	14,1	12,1	10		
DMH 30/360.80 T		3,9						3,85	3,8	3,75	3,65	3,48	3,1	2,45	1,75			
DMH 60/360.80 T		5,7						5,66	5,61	5,59	5,5	5,4	5	4,55	3,9	3,1		
DPH 120/360.80 T		11,8						11,65	11,58	11,5	11,4	11,25	10,75	10,2	9,39	8,37	5,65	
DPH 150/360.80 T		15,3						15,1	15,06	14,99	14,92	14,75	14,5	14	13,4	12,4	10,3	6
DPH 180/360.80 T		17,5						17,4	17,25	17,1	16,8	16,25	15	13,7	12	10,1	5,5	

NOT OFFICIAL

BMH 30/250.40 T - WET ROTOR CIRCULATORS FOR HEATING AND AIR CONDITIONING SYSTEMS - SINGOL, FLANGED

Pumped liquid temperature range: from -10 °C to +120 °C - **Maximum operating pressure:** 10 bar (1000 kPa)

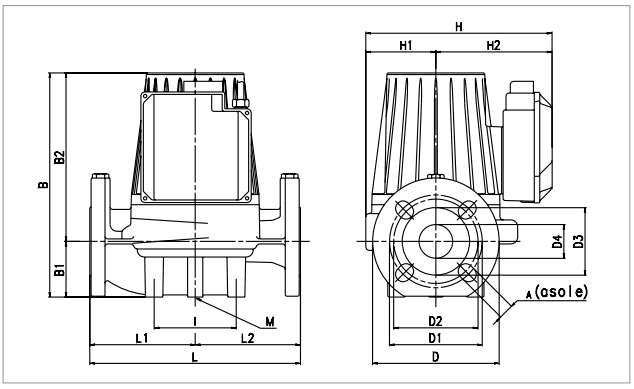

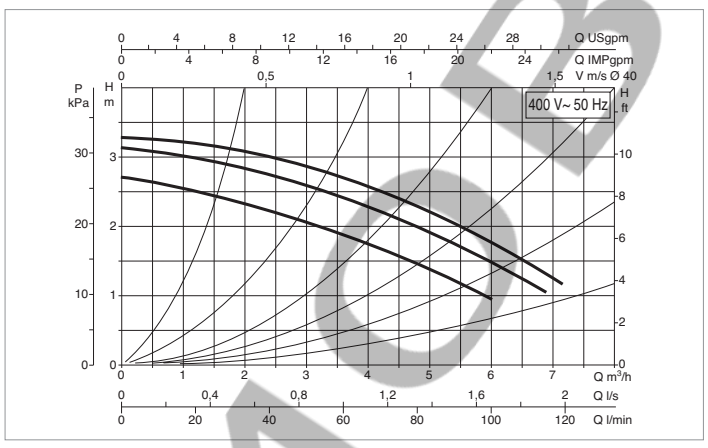

The performance curves are based on kinematic viscosity values = 1 mm²/s and density equal to 1000 kg/m³. Curve tolerance according to ISO 9906.

MODEL	CENTRE DISTANCE mm	FLANGES ON REQUEST	ELECTRICAL DATA					MINIMUM SUCTION PRESSURE				
			POWER INPUT 50 Hz	SPEED	REV. 1/min	P1 MAX W	In A	t°	75°	90 °	110°	120°
BMH 30/250.40 T	250	DN 40 - PN 10	3x230 V ~	2 1	1340 1260	100 88	0.48 0.39	m.c.a.	0.9	4	–	18
			3x400 V ~	3 2 1	1440 1430 1260	192 155 88	0.78 0.58 0.23					

MODEL	L	L1	L2	A	B	B1	B2	D	D1	D2	D3	D4	I	I1	I2	I3	M	H	H1	H2	WEIGHT kg
BMH 30/250.40 T	250	125	125	18	266	66	200	150	110	100	80	40	100	–	–	–	M10	221	83	138	17,5

BPH 60/250.40 M - WET ROTOR CIRCULATORS FOR HEATING AND AIR CONDITIONING SYSTEMS - SINGOL, FLANGED

Pumped liquid temperature range: from -10 °C to +110 °C - **Maximum operating pressure:** 10 bar (1000 kPa)

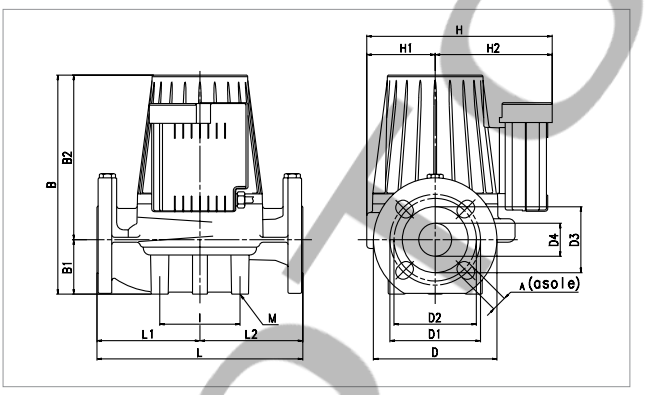

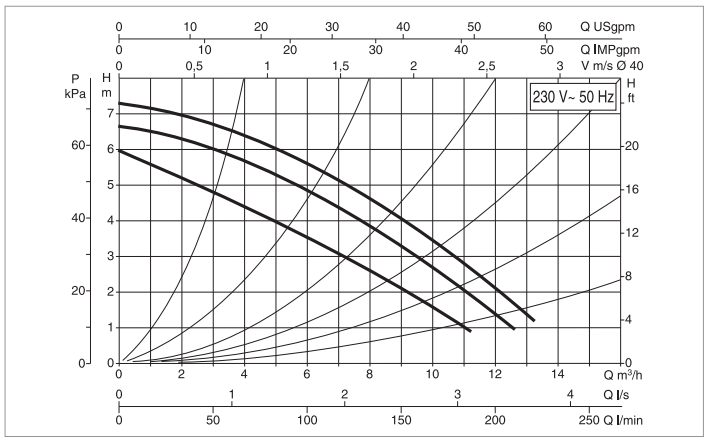

The performance curves are based on kinematic viscosity values = 1 mm²/s and density equal to 1000 kg/m³. Curve tolerance according to ISO 9906.

MODEL	CENTRE DISTANCE mm	FLANGES ON REQUEST	ELECTRICAL DATA					MINIMUM SUCTION PRESSURE				
			POWER INPUT 50 Hz	SPEED	REV. 1/min	P1 MAX W	In A	t°	75°	90 °	110°	120°
BPH 60/250.40 M	250	DN 40 - PN 10	–	–	–	–	–	m.c.a.	1.6	4	14	–
			1x230 V ~	3 2 1	2830 2750 2410	316 309 292	1.43 1.53 1.51					

MODEL	L	L1	L2	A	B	B1	B2	D	D1	D2	D3	D4	I	I1	I2	I3	M	H	H1	H2	WEIGHT kg
BPH 60/250.40 M	250	125	125	18	266	66	200	150	110	100	80	40	100	–	–	–	M10	221	83	138	17,5

MOTORMOB

BPH 60/250.40 T - WET ROTOR CIRCULATORS FOR HEATING AND AIR CONDITIONING SYSTEMS - SINGOL, FLANGED

Pumped liquid temperature range: from -10 °C to +120 °C - **Maximum operating pressure:** 10 bar (1000 kPa)

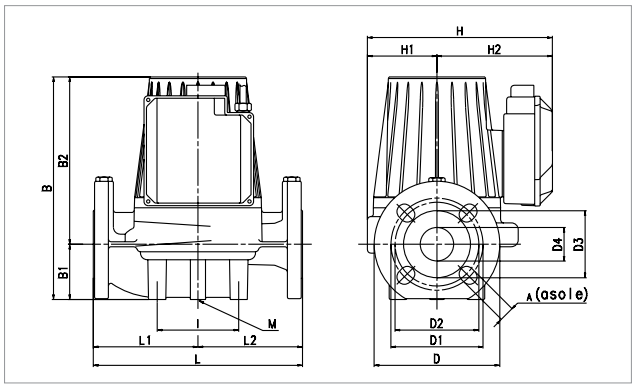

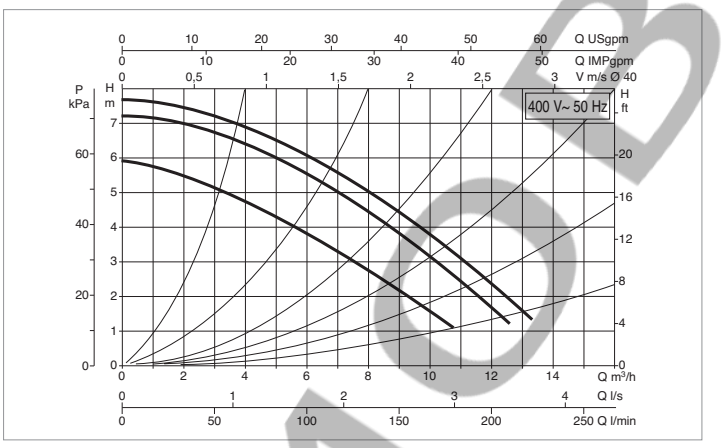

The performance curves are based on kinematic viscosity values = 1 mm²/s and density equal to 1000 kg/m³. Curve tolerance according to ISO 9906.

MODEL	CENTRE DISTANCE mm	FLANGES ON REQUEST	ELECTRICAL DATA					MINIMUM SUCTION PRESSURE				
			POWER INPUT 50 Hz	SPEED	REV. 1/min	P1 MAX W	In A	t°	75°	90 °	110°	120°
BPH 60/250.40 T	250	DN 40 - PN 10	3x230 V ~	2 1	2570 2420	253 229	0.81 0.72	m.c.a.	1.6	4	–	19
			3x400 V ~	3 2 1	2850 2810 2430	348 316 232	0.99 0.75 0.42					

MODEL	L	L1	L2	A	B	B1	B2	D	D1	D2	D3	D4	I	I1	I2	I3	M	H	H1	H2	WEIGHT kg
BPH 60/250.40 T	250	125	125	18	266	66	200	150	110	100	80	40	100	–	–	–	M10	221	83	138	17,5

BPH 120/250.40 M - WET ROTOR CIRCULATORS FOR HEATING AND AIR CONDITIONING SYSTEMS - SINGOL, FLANGED

Pumped liquid temperature range: from -10 °C to +110 °C - **Maximum operating pressure:** 10 bar (1000 kPa)

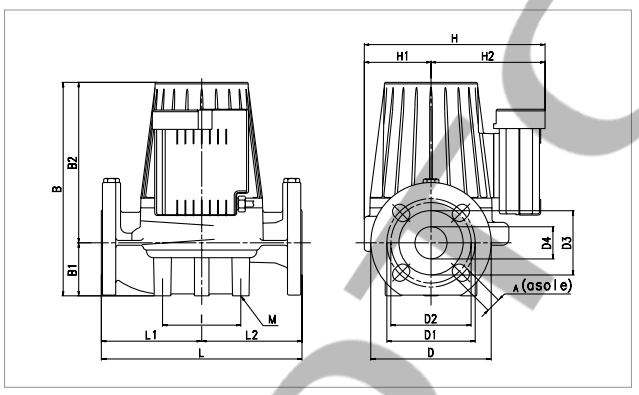

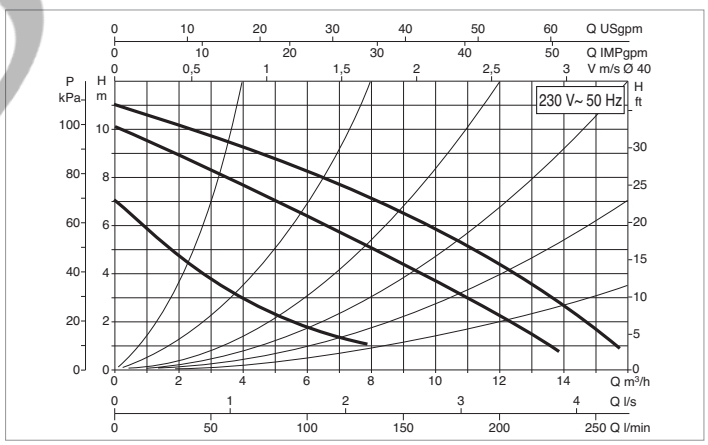

The performance curves are based on kinematic viscosity values = 1 mm²/s and density equal to 1000 kg/m³. Curve tolerance according to ISO 9906.

MODEL	CENTRE DISTANCE mm	FLANGES ON REQUEST	ELECTRICAL DATA					MINIMUM SUCTION PRESSURE				
			POWER INPUT 50 Hz	SPEED	REV. 1/min	P1 MAX W	In A	t°	75°	90 °	110°	120°
BPH 120/250.40 M	250	DN 40 - PN 10	–	–	–	–	–	m.c.a.	6	9	18	–
			1x230 V ~	3 2 1	2650 2320 1520	510 498 376	2.24 2.35 1.96					

MODEL	L	L1	L2	A	B	B1	B2	D	D1	D2	D3	D4	I	I1	I2	I3	M	H	H1	H2	WEIGHT kg
BPH 120/250.40 M	250	125	125	18	266	66	200	150	110	100	80	40	100	–	–	–	M10	221	83	138	17,5

MOORMOB

BPH 120/250.40 T - WET ROTOR CIRCULATORS FOR HEATING AND AIR CONDITIONING SYSTEMS - SINGOL, FLANGED

Pumped liquid temperature range: from -10 °C to +120 °C - **Maximum operating pressure:** 10 bar (1000 kPa)

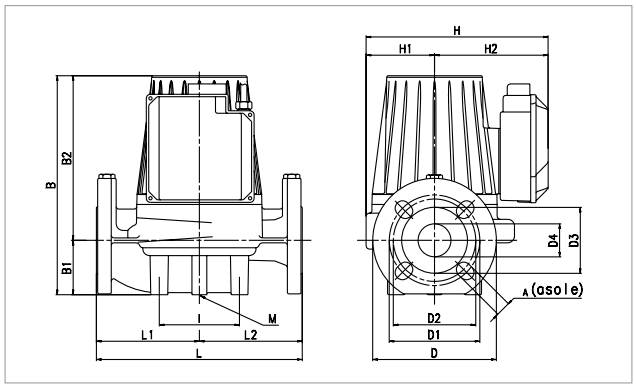

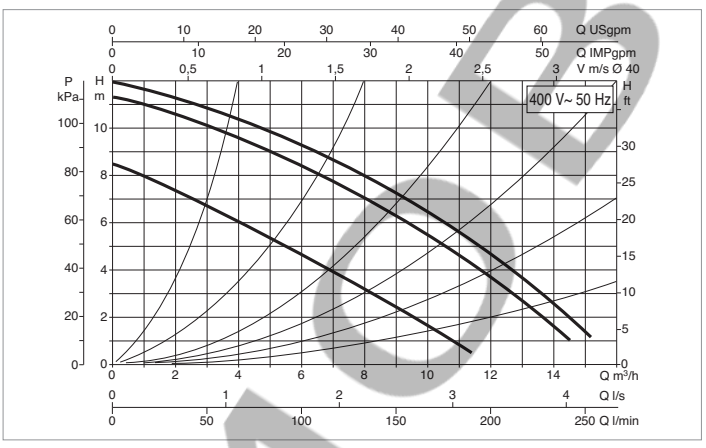

The performance curves are based on kinematic viscosity values = 1 mm²/s and density equal to 1000 kg/m³. Curve tolerance according to ISO 9906.

MODEL	CENTRE DISTANCE mm	FLANGES ON REQUEST	ELECTRICAL DATA					MINIMUM SUCTION PRESSURE				
			POWER INPUT 50 Hz	SPEED	REV. 1/min	P1 MAX W	In A	t°	75°	90 °	110°	120°
BPH 120/250.40 T	250	DN 40 - PN 10	3x230 V ~	2 1	2300 2070	395 340	1.2 1.07	m.c.a.	6	9	–	23
			3x400 V ~	3 2 1	2780 2710 2080	536 499 339	1.16 0.98 0.62					

MODEL	L	L1	L2	A	B	B1	B2	D	D1	D2	D3	D4	I	I1	I2	I3	M	H	H1	H2	WEIGHT kg
BPH 120/250.40 T	250	125	125	18	266	66	200	150	110	100	80	40	100	–	–	–	M10	221	83	138	17,5

BMH 30/280.50 T - WET ROTOR CIRCULATORS FOR HEATING AND AIR CONDITIONING SYSTEMS - SINGOL, FLANGED

Pumped liquid temperature range: from -10 °C to +120 °C - **Maximum operating pressure:** 10 bar (1000 kPa)

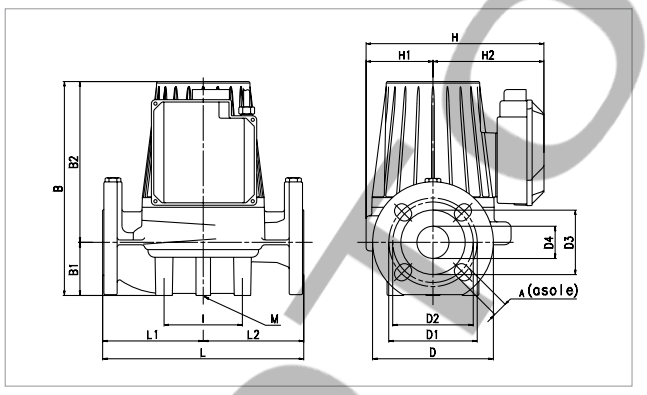

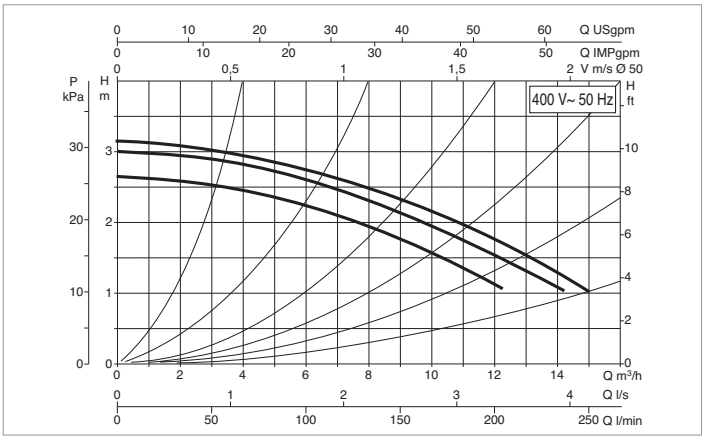

The performance curves are based on kinematic viscosity values = 1 mm²/s and density equal to 1000 kg/m³. Curve tolerance according to ISO 9906.

MODEL	CENTRE DISTANCE mm	FLANGES ON REQUEST	ELECTRICAL DATA					MINIMUM SUCTION PRESSURE				
			POWER INPUT 50 Hz	SPEED	REV. 1/min	P1 MAX W	In A	t°	75°	90 °	110°	120°
BMH 30/280.50 T	280	DN 50 - PN 10	3x230 V ~	2 1	1390 1340	148 134	0.7 0.55	m.c.a.	0.9	4	–	18
			3x400 V ~	3 2 1	1460 1450 1350	255 216 131	1.12 0.83 0.32					

MODEL	L	L1	L2	A	B	B1	B2	D	D1	D2	D3	D4	I	I1	I2	I3	M	H	H1	H2	WEIGHT kg
BMH 30/280.50 T	280	140	140	18	312	73	239	165	125	110	90	50	100	–	–	–	M10	254	96	158	24

MOTOR MOD

BMH 60/280.50 T - WET ROTOR CIRCULATORS FOR HEATING AND AIR CONDITIONING SYSTEMS - SINGOL, FLANGED

Pumped liquid temperature range: from -10 °C to +120 °C - **Maximum operating pressure:** 10 bar (1000 kPa)

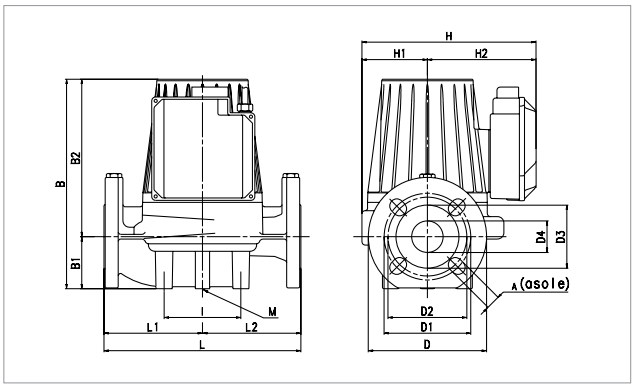

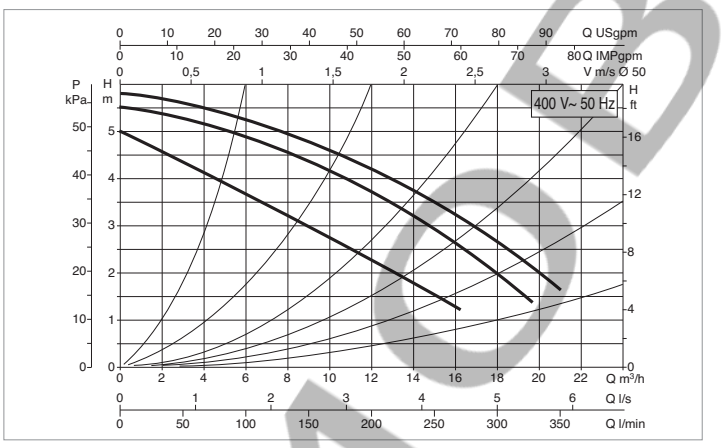

The performance curves are based on kinematic viscosity values = 1 mm²/s and density equal to 1000 kg/m³. Curve tolerance according to ISO 9906.

MODEL	CENTRE DISTANCE mm	FLANGES ON REQUEST	ELECTRICAL DATA					MINIMUM SUCTION PRESSURE				
			POWER INPUT 50 Hz	SPEED	REV. 1/min	P1 MAX W	In A	t°	75°	90 °	110°	120°
BMH 60/280.50 T	280	DN 50 - PN 10	3x230 V ~	2 1	1210 1120	272 240	0.94 0.8	m.c.a.	4	7.5	–	21
			3x400 V ~	3 2 1	1400 1360 1130	410 367 235	1.2 0.95 0.46					

MODEL	L	L1	L2	A	B	B1	B2	D	D1	D2	D3	D4	I	I1	I2	I3	M	H	H1	H2	WEIGHT kg
BMH 60/280.50 T	280	140	140	18	312	73	239	165	125	110	90	50	100	–	–	–	M10	254	96	158	24

BPH 60/280.50 M - WET ROTOR CIRCULATORS FOR HEATING AND AIR CONDITIONING SYSTEMS - SINGOL, FLANGED

Pumped liquid temperature range: from -10 °C to +110 °C - **Maximum operating pressure:** 10 bar (1000 kPa)

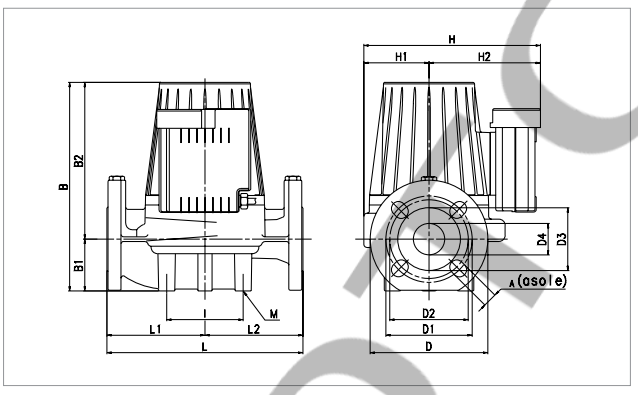

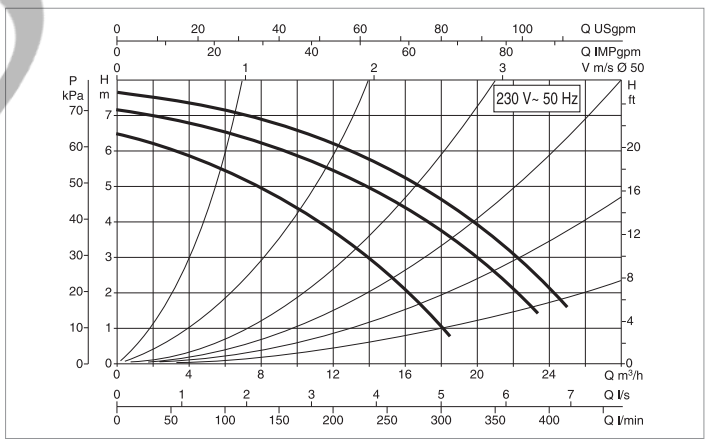

The performance curves are based on kinematic viscosity values = 1 mm²/s and density equal to 1000 kg/m³. Curve tolerance according to ISO 9906.

MODEL	CENTRE DISTANCE mm	FLANGES ON REQUEST	ELECTRICAL DATA					MINIMUM SUCTION PRESSURE				
			POWER INPUT 50 Hz	SPEED	REV. 1/min	P1 MAX W	In A	t°	75°	90 °	110°	120°
BPH 60/280.50 M	280	DN 50 - PN 10	–	–	–	–	–	m.c.a.	1.6	6	14	–
			1x230 V ~	3 2 1	2840 2730 2200	595 540 506	2.79 2.45 2.58					

MODEL	L	L1	L2	A	B	B1	B2	D	D1	D2	D3	D4	I	I1	I2	I3	M	H	H1	H2	WEIGHT kg
BPH 60/280.50 M	280	140	140	18	312	73	239	165	125	110	90	50	100	–	–	–	M10	254	156	158	24

МОНТАЖ

BPH 60/280.50 T - WET ROTOR CIRCULATORS FOR HEATING AND AIR CONDITIONING SYSTEMS - SINGOL, FLANGED

Pumped liquid temperature range: from -10 °C to +120 °C - **Maximum operating pressure:** 10 bar (1000 kPa)

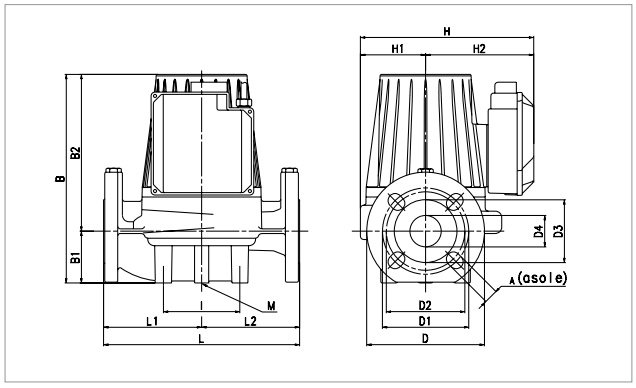

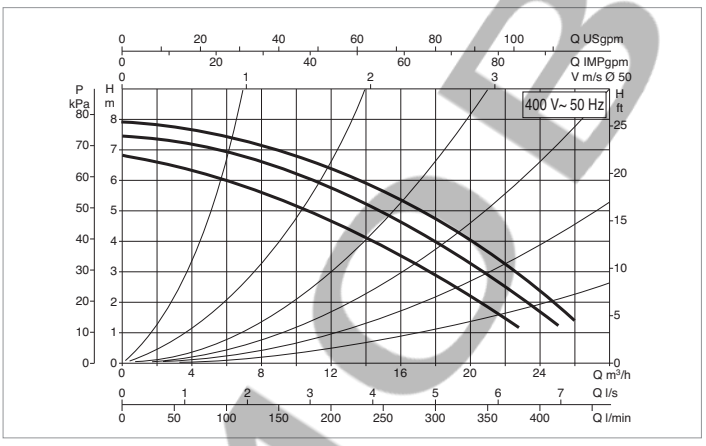

The performance curves are based on kinematic viscosity values = 1 mm²/s and density equal to 1000 kg/m³. Curve tolerance according to ISO 9906.

MODEL	CENTRE DISTANCE mm	FLANGES ON REQUEST	ELECTRICAL DATA					MINIMUM SUCTION PRESSURE				
			POWER INPUT 50 Hz	SPEED	REV. 1/min	P1 MAX W	In A	t°	75°	90 °	110°	120°
BPH 60/280.50 T	280	DN 50 - PN 10	3x230 V ~	2 1	2670 2570	464 432	1.35 1.23	m.c.a.	1.6	6	–	19
			3x400 V ~	3 2 1	2890 2860 2570	589 546 423	1.31 1.1 0.71					

MODEL	L	L1	L2	A	B	B1	B2	D	D1	D2	D3	D4	I	I1	I2	I3	M	H	H1	H2	WEIGHT kg
BPH 60/280.50 T	280	140	140	18	312	73	239	165	125	110	90	50	100	–	–	–	M10	254	156	158	24

BPH 120/280.50 M - WET ROTOR CIRCULATORS FOR HEATING AND AIR CONDITIONING SYSTEMS - SINGOL, FLANGED

Pumped liquid temperature range: from -10 °C to + 90 °C - **Maximum operating pressure:** 10 bar (1000 kPa)

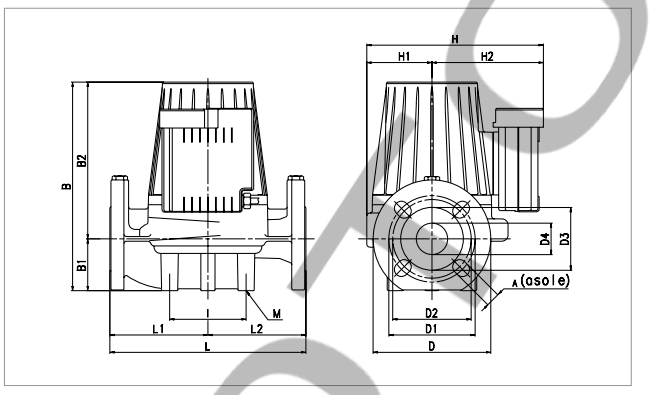

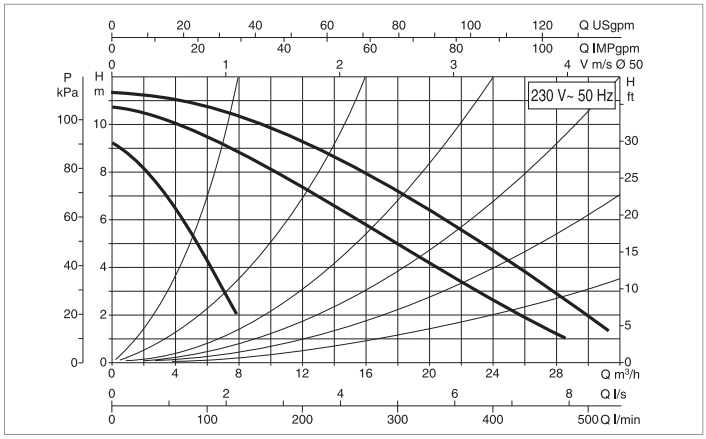

The performance curves are based on kinematic viscosity values = 1 mm²/s and density equal to 1000 kg/m³. Curve tolerance according to ISO 9906.

MODEL	CENTRE DISTANCE mm	FLANGES ON REQUEST	ELECTRICAL DATA					MINIMUM SUCTION PRESSURE				
			POWER INPUT 50 Hz	SPEED	REV. 1/min	P1 MAX W	In A	t°	75°	90 °	110°	120°
BPH 120/280.50 M	280	DN 50 - PN 10	–	–	–	–	–	m.c.a.	2	5	–	20
			1x230 V ~	3 2 1	2690 2360 1340	870 800 590	3,97 3,69 3,12					

MODEL	L	L1	L2	A	B	B1	B2	D	D1	D2	D3	D4	I	I1	I2	I3	M	H	H1	H2	WEIGHT kg
BPH 120/280.50 M	280	140	140	18	312	73	239	165	125	110	90	50	100	–	–	–	M10	254	96	158	24

MOTORMOB

BPH 120/280.50 T - WET ROTOR CIRCULATORS FOR HEATING AND AIR CONDITIONING SYSTEMS - SINGOL, FLANGED

Pumped liquid temperature range: from -10 °C to +120 °C - **Maximum operating pressure:** 10 bar (1000 kPa)

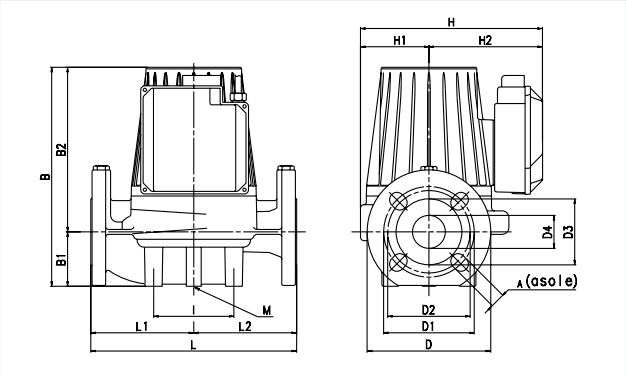

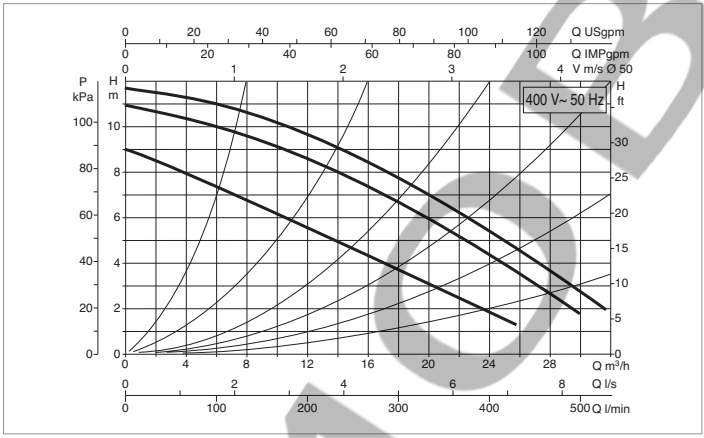

The performance curves are based on kinematic viscosity values = 1 mm²/s and density equal to 1000 kg/m³. Curve tolerance according to ISO 9906.

MODEL	CENTRE DISTANCE mm	FLANGES ON REQUEST	ELECTRICAL DATA					MINIMUM SUCTION PRESSURE				
			POWER INPUT 50 Hz	SPEED	REV. 1/min	P1 MAX W	In A	t°	75°	90 °	110°	120°
BPH 120/280.50 T	280	DN 50 - PN 10	3x230 V ~	2 1	2430 2240	683 605	1.95 1.75	m.c.a.	2	5	–	20
			3x400 V ~	3 2 1	2810 2740 2260	898 840 603	1.67 1.47 1					

MODEL	L	L1	L2	A	B	B1	B2	D	D1	D2	D3	D4	I	I1	I2	I3	M	H	H1	H2	WEIGHT kg
BPH 120/280.50 T	280	140	140	18	312	73	239	165	125	110	90	50	100	–	–	–	M10	254	96	158	26

BPH 150/280.50 T - WET ROTOR CIRCULATORS FOR HEATING AND AIR CONDITIONING SYSTEMS - SINGOL, FLANGED

Pumped liquid temperature range: from -10 °C to +110 °C - **Maximum operating pressure:** 10 bar (1000 kPa)

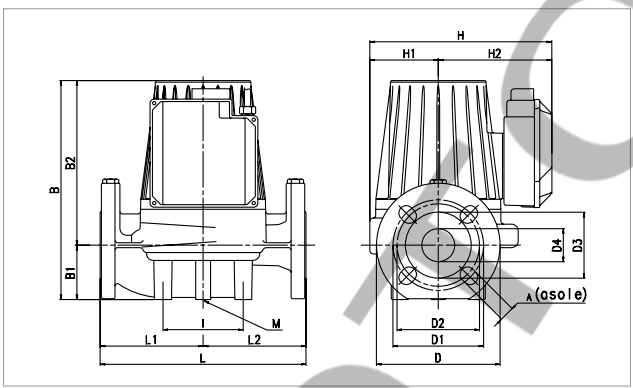

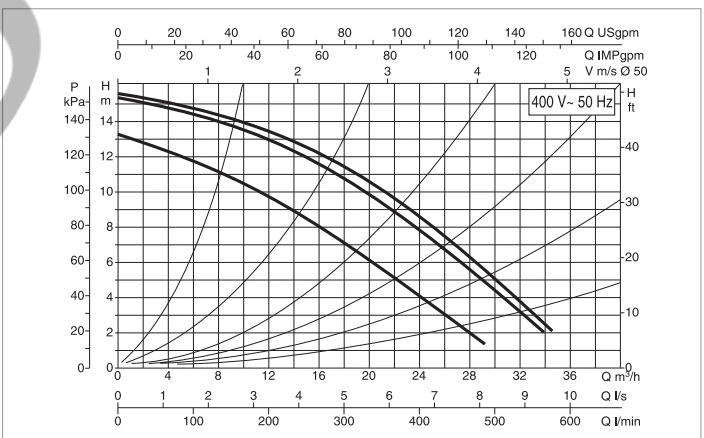

The performance curves are based on kinematic viscosity values = 1 mm²/s and density equal to 1000 kg/m³. Curve tolerance according to ISO 9906.

MODEL	CENTRE DISTANCE mm	FLANGES ON REQUEST	ELECTRICAL DATA					MINIMUM SUCTION PRESSURE				
			POWER INPUT 50 Hz	SPEED	REV. 1/min	P1 MAX W	In A	t°	75°	90 °	110°	120°
BPH 150/280.50 T	280	DN 50 - PN 10	3x230 V ~	2 1	2553 2420	1130 1032	3.22 3	m.c.a.	2	5	–	20
			3x400 V ~	3 2 1	2850 2802 2425	1470 1360 1030	2.9 2.5 1.7					

MODEL	L	L1	L2	A	B	B1	B2	D	D1	D2	D3	D4	I	I1	I2	I3	M	H	H1	H2	WEIGHT kg
BPH 150/280.50 T	280	140	140	18	362	73	289	165	125	110	90	50	100	–	–	–	M10	254	96	158	26

MOTOR MOB

BPH 180/280.50 T - WET ROTOR CIRCULATORS FOR HEATING AND AIR CONDITIONING SYSTEMS - SINGOL, FLANGED

Pumped liquid temperature range: from -10 °C to +120 °C - **Maximum operating pressure:** 10 bar (1000 kPa)

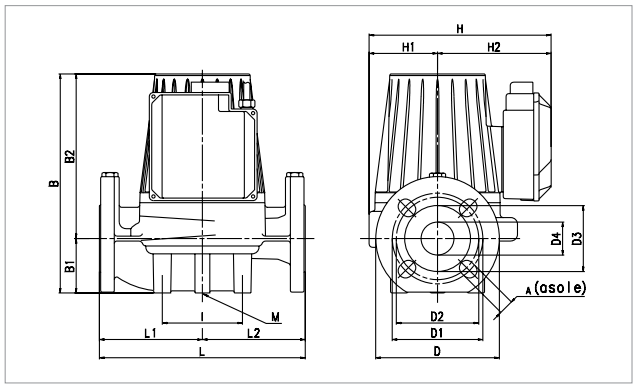

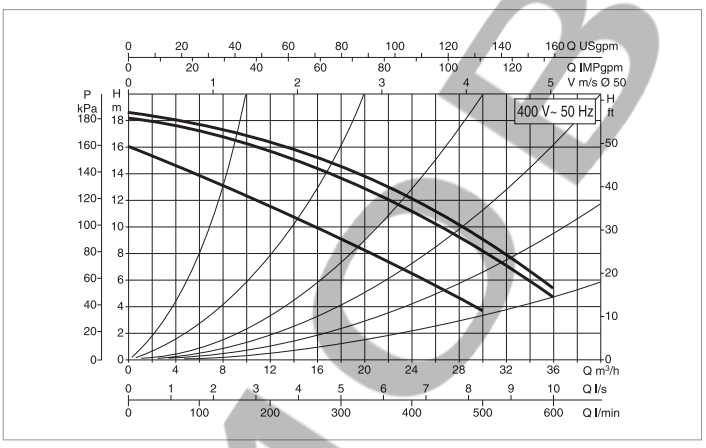

The performance curves are based on kinematic viscosity values = 1 mm²/s and density equal to 1000 kg/m³. Curve tolerance according to ISO 9906.

MODEL	CENTRE DISTANCE mm	FLANGES ON REQUEST	ELECTRICAL DATA					MINIMUM SUCTION PRESSURE				
			POWER INPUT 50 Hz	SPEED	REV. 1/min	P1 MAX W	In A	t°	75°	90 °	110°	120°
BPH 180/280.50 T	280	DN 50 - PN 10	3x230 V ~	2 1	2520 2340	1230 1120	3,5 3,2	m.c.a.	2	5	–	20
			3x400 V ~	3 2 1	2830 2780 2360	1630 1540 1130	3 2,70 1,85					

MODEL	L	L1	L2	A	B	B1	B2	D	D1	D2	D3	D4	I	I1	I2	I3	M	H	H1	H2	WEIGHT kg
BPH 180/280.50 T	280	140	140	18	362	73	289	165	125	110	90	50	100	–	–	–	M10	254	96	158	26

BMH 30/340.65 T - WET ROTOR CIRCULATORS FOR HEATING AND AIR CONDITIONING SYSTEMS - SINGOL, FLANGED

Pumped liquid temperature range: from -10 °C to +120 °C - **Maximum operating pressure:** 10 bar (1000 kPa)

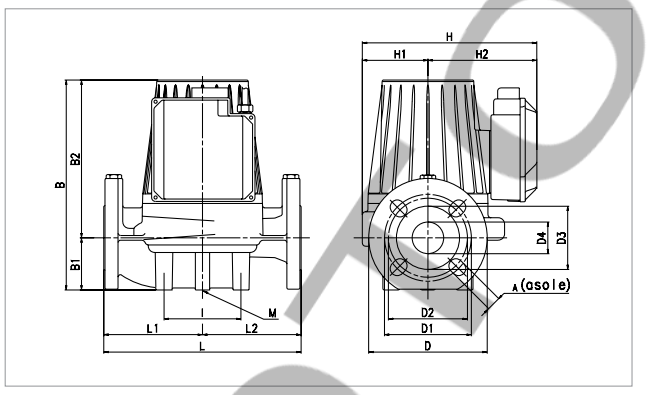

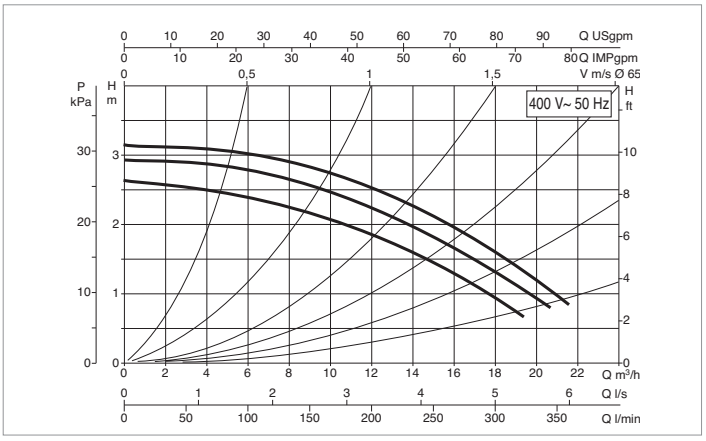

The performance curves are based on kinematic viscosity values = 1 mm²/s and density equal to 1000 kg/m³. Curve tolerance according to ISO 9906.

MODEL	CENTRE DISTANCE mm	FLANGES ON REQUEST	ELECTRICAL DATA					MINIMUM SUCTION PRESSURE				
			POWER INPUT 50 Hz	SPEED	REV. 1/min	P1 MAX W	In A	t°	75°	90 °	110°	120°
BMH 30/340.65 T	340	DN 65 - PN 10	3x230 V ~	2 1	1360 1310	170 154	0.73 0.60	m.c.a.	4	7.5	–	21
			3x400 V ~	3 2 1	1450 1430 1310	270 233 150	1.12 0.84 0.35					

MODEL	L	L1	L2	A	B	B1	B2	D	D1	D2	D3	D4	I	I1	I2	I3	M	H	H1	H2	WEIGHT kg
BMH 30/340.65 T	340	170	170	18	334	82	252	185	145	130	110	65	100	–	–	–	M12	259	100	159	27,5

MOTOR MOB

BMH 60/340.65 T - WET ROTOR CIRCULATORS FOR HEATING AND AIR CONDITIONING SYSTEMS - SINGOL, FLANGED

Pumped liquid temperature range: from -10 °C to +120 °C - **Maximum operating pressure:** 10 bar (1000 kPa)

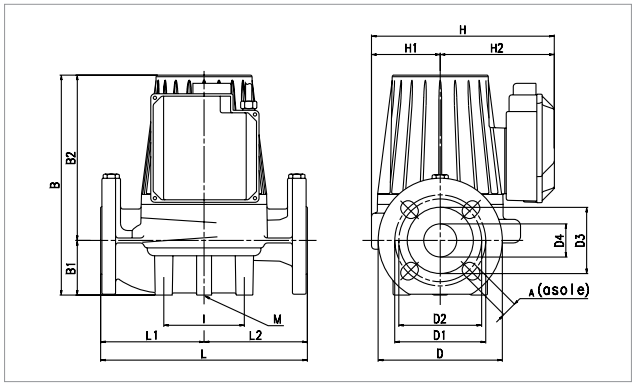

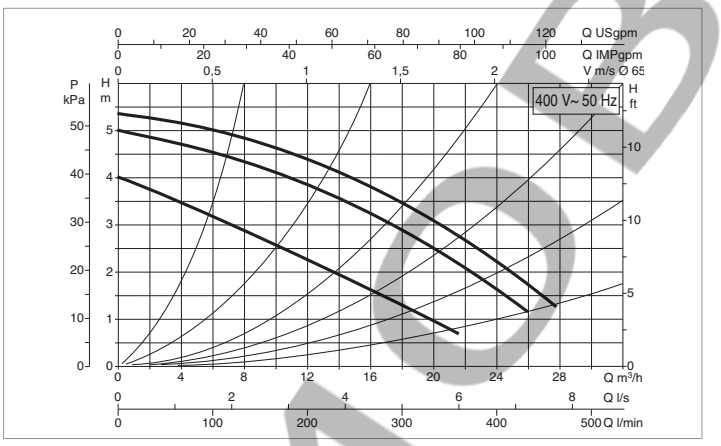

The performance curves are based on kinematic viscosity values = 1 mm²/s and density equal to 1000 kg/m³. Curve tolerance according to ISO 9906.

MODEL	CENTRE DISTANCE mm	FLANGES ON REQUEST	ELECTRICAL DATA					MINIMUM SUCTION PRESSURE				
			POWER INPUT 50 Hz	SPEED	REV. 1/min	P1 MAX W	In A	t°	75°	90 °	110°	120°
BMH 60/340.65 T	340	DN 65 - PN 10	3x230 V ~	2 1	1170 1070	295 257	1 0.85	m.c.a.	4	7.5	–	21
			3x400 V ~	3 2 1	1380 1350 1090	445 403 255	1.2 0.97 0.49					

MODEL	L	L1	L2	A	B	B1	B2	D	D1	D2	D3	D4	I	I1	I2	I3	M	H	H1	H2	WEIGHT kg
BMH 60/340.65 T	340	170	170	18	334	82	252	185	145	130	110	65	100	–	–	–	M12	259	100	159	27,5

BPH 60/340.65 M - WET ROTOR CIRCULATORS FOR HEATING AND AIR CONDITIONING SYSTEMS - SINGOL, FLANGED

Pumped liquid temperature range: from -10 °C to + 110 °C - **Maximum operating pressure:** 10 bar (1000 kPa)

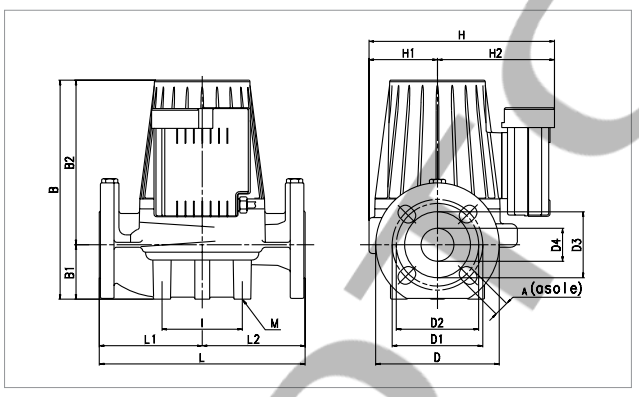

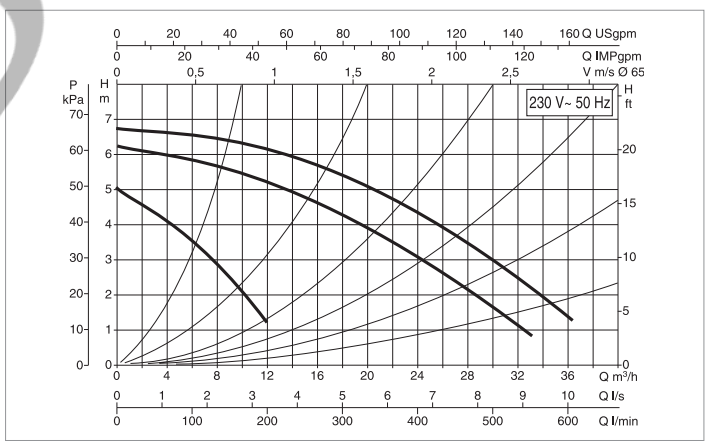

The performance curves are based on kinematic viscosity values = 1 mm²/s and density equal to 1000 kg/m³. Curve tolerance according to ISO 9906.

MODEL	CENTRE DISTANCE mm	FLANGES ON REQUEST	ELECTRICAL DATA					MINIMUM SUCTION PRESSURE				
			POWER INPUT 50 Hz	SPEED	REV. 1/min	P1 MAX W	In A	t°	75°	90 °	110°	120°
BPH 60/340.65 M	340	DN 65 - PN 10	–	–	–	–	–	m.c.a.	1	4	13	–
			1x230 V ~	3 2 1	2780 2580 1460	735 685 564	3.37 3.13 3.12					

MODEL	L	L1	L2	A	B	B1	B2	D	D1	D2	D3	D4	I	I1	I2	I3	M	H	H1	H2	WEIGHT kg
BPH 60/340.65 M	340	170	170	18	334	82	252	185	145	130	110	65	100	–	–	–	M12	259	100	159	27,5

МОРТОВ

BPH 60/340.65 T - WET ROTOR CIRCULATORS FOR HEATING AND AIR CONDITIONING SYSTEMS - SINGOL, FLANGED

Pumped liquid temperature range: from -10 °C to +120 °C - **Maximum operating pressure:** 10 bar (1000 kPa)

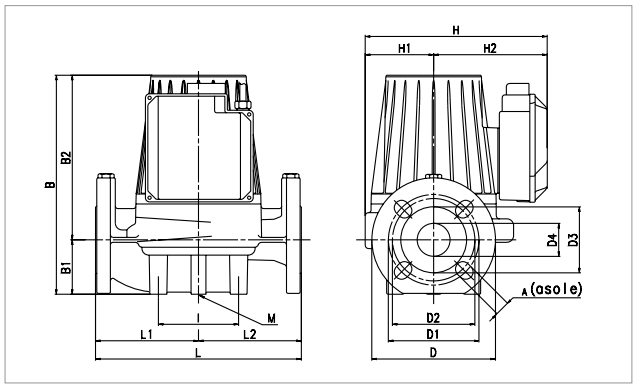

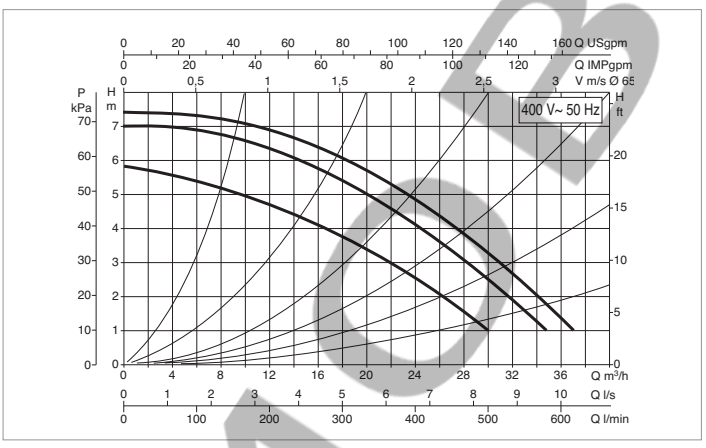

The performance curves are based on kinematic viscosity values = 1 mm²/s and density equal to 1000 kg/m³. Curve tolerance according to ISO 9906.

MODEL	CENTRE DISTANCE mm	FLANGES ON REQUEST	ELECTRICAL DATA					MINIMUM SUCTION PRESSURE				
			POWER INPUT 50 Hz	SPEED	REV. 1/min	P1 MAX W	In A	t°	75°	90 °	110°	120°
BPH 60/340.65 T	340	DN 65 - PN 10	3x230 V ~	2 1	2550 2380	582 532	1.67 1.53	m.c.a.	1	4	–	18
			3x400 V ~	3 2 1	2850 2800 2400	756 705 535	1.5 1.3 0.9					

MODEL	L	L1	L2	A	B	B1	B2	D	D1	D2	D3	D4	I	I1	I2	I3	M	H	H1	H2	WEIGHT kg
BPH 60/340.65 T	340	170	170	18	334	82	252	185	145	130	110	65	100	–	–	–	M12	259	100	159	30,5

BPH 120/340.65 T - WET ROTOR CIRCULATORS FOR HEATING AND AIR CONDITIONING SYSTEMS - SINGOL, FLANGED

Pumped liquid temperature range: from -10 °C to +120 °C - **Maximum operating pressure:** 10 bar (1000 kPa)

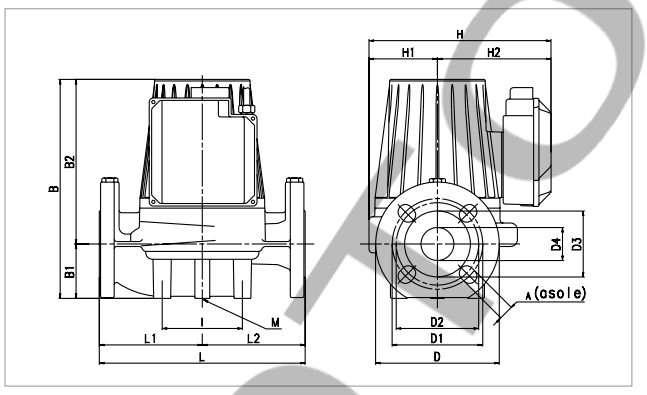

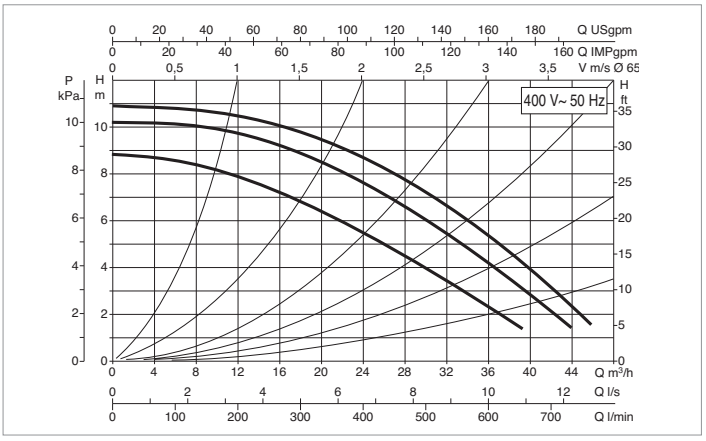

The performance curves are based on kinematic viscosity values = 1 mm²/s and density equal to 1000 kg/m³. Curve tolerance according to ISO 9906.

MODEL	CENTRE DISTANCE mm	FLANGES ON REQUEST	ELECTRICAL DATA					MINIMUM SUCTION PRESSURE				
			POWER INPUT 50 Hz	SPEED	REV. 1/min	P1 MAX W	In A	t°	75°	90 °	110°	120°
BPH 120/340.65 T	340	DN 65 - PN 10	3x230 V ~	2 1	2630 2500	1001 940	2.85 2.66	m.c.a.	6	9	–	22
			3x400 V ~	3 2 1	2880 2830 2520	1275 1200 934	2.64 2.25 1.52					

MODEL	L	L1	L2	A	B	B1	B2	D	D1	D2	D3	D4	I	I1	I2	I3	M	H	H1	H2	WEIGHT kg
BPH 120/340.65 T	340	170	170	18	384	82	302	185	145	130	110	65	100	–	–	–	M12	259	100	159	32,5

MOTOR MOB

BPH 150/340.65 T - WET ROTOR CIRCULATORS FOR HEATING AND AIR CONDITIONING SYSTEMS - SINGOL, FLANGED

Pumped liquid temperature range: from -10 °C to +110 °C - **Maximum operating pressure:** 10 bar (1000 kPa)

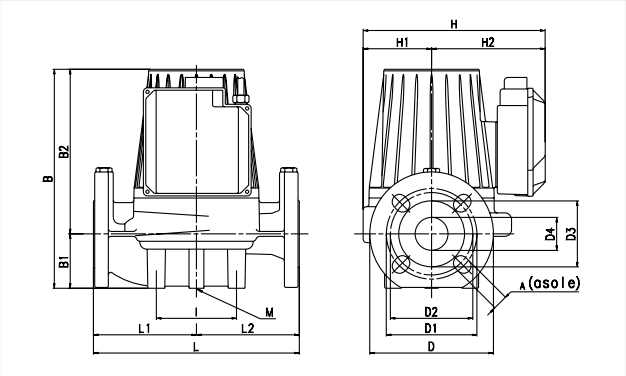

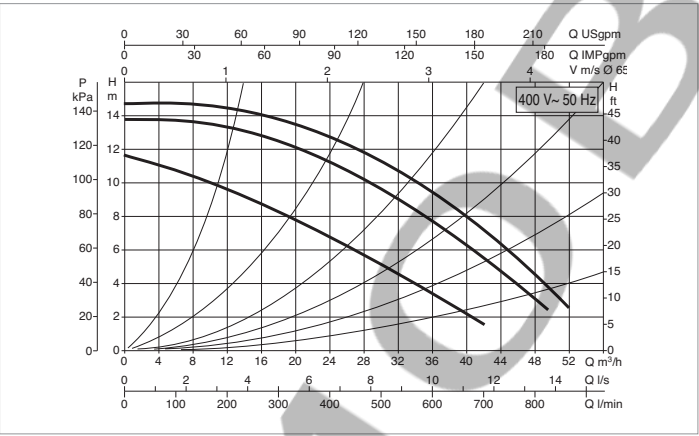

The performance curves are based on kinematic viscosity values = 1 mm²/s and density equal to 1000 kg/m³. Curve tolerance according to ISO 9906.

MODEL	CENTRE DISTANCE mm	FLANGES ON REQUEST	ELECTRICAL DATA					MINIMUM SUCTION PRESSURE				
			POWER INPUT 50 Hz	SPEED	REV. 1/min	P1 MAX W	In A	t°	75°	90 °	110°	120°
BPH 150/340.65 T	340	DN 65 - PN 10	3x230 V ~	2 1	2410 2250	1345 1188	3.8 3.36	m.c.a.	7	11	18	–
			3x400 V ~	3 2 1	2800 2730 2250	1796 1690 1210	3.25 2.93 2					

MODEL	L	L1	L2	A	B	B1	B2	D	D1	D2	D3	D4	I	I1	I2	I3	M	H	H1	H2	WEIGHT kg
BPH 150/340.65 T	340	170	170	18	384	82	302	185	145	130	110	65	100	–	–	–	M12	259	100	159	32,5

BPH 180/340.65 T - WET ROTOR CIRCULATORS FOR HEATING AND AIR CONDITIONING SYSTEMS - SINGOL, FLANGED

Pumped liquid temperature range: from -10 °C to +110 °C - **Maximum operating pressure:** 10 bar (1000 kPa)

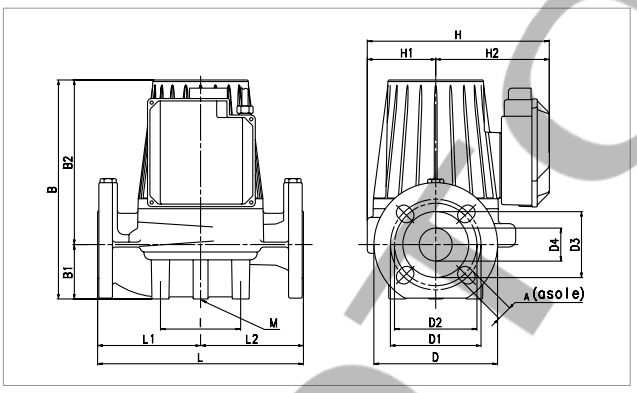

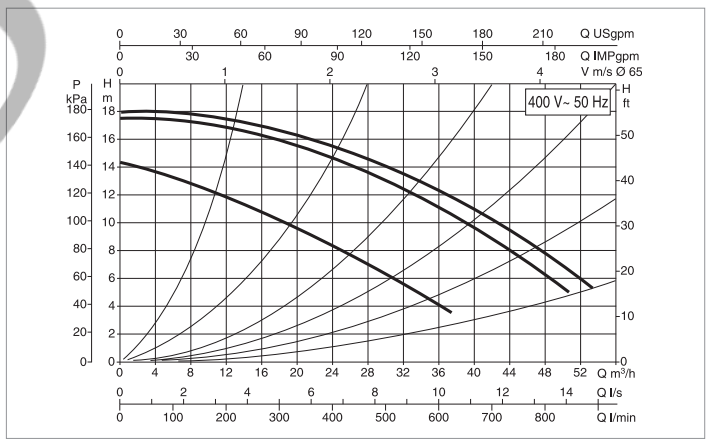

The performance curves are based on kinematic viscosity values = 1 mm²/s and density equal to 1000 kg/m³. Curve tolerance according to ISO 9906.

MODEL	CENTRE DISTANCE mm	FLANGES ON REQUEST	ELECTRICAL DATA					MINIMUM SUCTION PRESSURE				
			POWER INPUT 50 Hz	SPEED	REV. 1/min	P1 MAX W	In A	t°	75°	90 °	110°	120°
BPH 180/340.65 T	340	DN 65 - PN 10	3x230 V ~	2 1	2380 2170	1670 1490	4,7 4,25	m.c.a.	7	11	18	–
			3x400 V ~	3 2 1	2780 2700 2200	2310 2210 1490	4 3,5 2,4					

MODEL	L	L1	L2	A	B	B1	B2	D	D1	D2	D3	D4	I	I1	I2	I3	M	H	H1	H2	WEIGHT kg
BPH 180/340.65 T	340	170	170	18	384	82	302	185	145	130	110	65	100	–	–	–	M12	259	100	159	32,5

MOTORMOB

BMH 30/360.80 T - WET ROTOR CIRCULATORS FOR HEATING AND AIR CONDITIONING SYSTEMS - SINGOL, FLANGED

Pumped liquid temperature range: from -10 °C to +120 °C - **Maximum operating pressure:** 10 bar (1000 kPa)

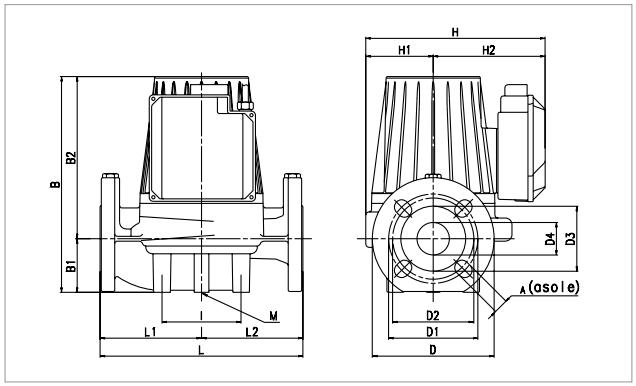

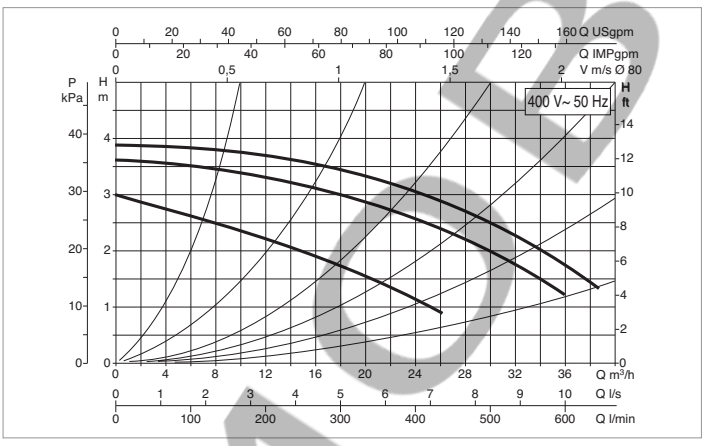

The performance curves are based on kinematic viscosity values = 1 mm²/s and density equal to 1000 kg/m³. Curve tolerance according to ISO 9906.

MODEL	CENTRE DISTANCE mm	FLANGES ON REQUEST	ELECTRICAL DATA					MINIMUM SUCTION PRESSURE				
			POWER INPUT 50 Hz	SPEED	REV. 1/min	P1 MAX W	In A	t°	75°	90 °	110°	120°
BMH 30/360.80 T	360	DN 80 - PN 10	3x230 V ~	2 1	1110 1010	313 268	1.05 0.88	m.c.a.	4	7.5	–	21
			3x400 V ~	3 2 1	1370 1330 1030	484 437 266	1.23 1 0.51					

MODEL	L	L1	L2	A	B	B1	B2	D	D1	D2	D3	D4	I	I1	I2	I3	M	H	H1	H2	WEIGHT kg
BMH 30/360.80 T	360	170	190	18	354	97	254	200	160	150	130	80	115	–	–	–	M12	297	100	159	31

BMH 60/360.80 T - WET ROTOR CIRCULATORS FOR HEATING AND AIR CONDITIONING SYSTEMS - SINGOL, FLANGED

Pumped liquid temperature range: from -10 °C to +110 °C - **Maximum operating pressure:** 10 bar (1000 kPa)

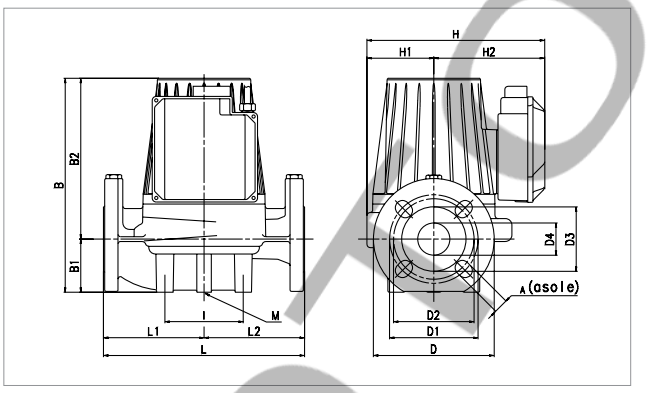

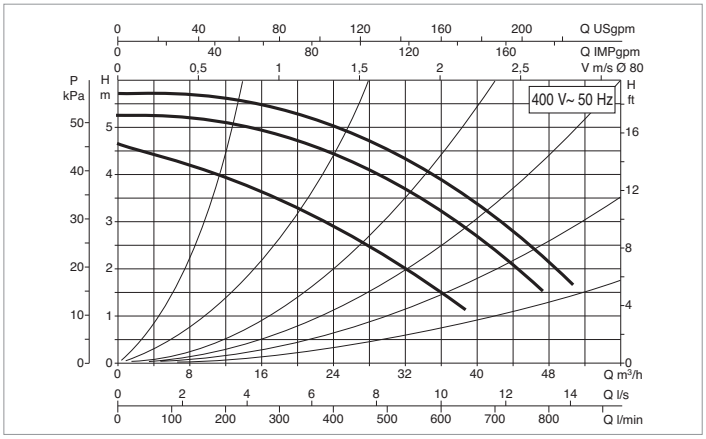

The performance curves are based on kinematic viscosity values = 1 mm²/s and density equal to 1000 kg/m³. Curve tolerance according to ISO 9906.

MODEL	CENTRE DISTANCE mm	FLANGES ON REQUEST	ELECTRICAL DATA					MINIMUM SUCTION PRESSURE				
			POWER INPUT 50 Hz	SPEED	REV. 1/min	P1 MAX W	In A	t°	75°	90 °	110°	120°
BMH 60/360.80 T	360	DN 80 - PN 10	3x230 V ~	2 1	1180 1100	535 465	1.82 1.55	m.c.a.	2	5	–	20
			3x400 V ~	3 2 1	1390 1350 1100	763 663 465	2.04 1.65 0.89					

MODEL	L	L1	L2	A	B	B1	B2	D	D1	D2	D3	D4	I	I1	I2	I3	M	H	H1	H2	WEIGHT kg
BMH 60/360.80 T	360	170	190	18	404	97	307	200	160	150	130	80	115	–	–	–	M12	259	100	159	40

MOTOR MOB

BPH 120/360.80 T - WET ROTOR CIRCULATORS FOR HEATING AND AIR CONDITIONING SYSTEMS - SINGOL, FLANGED

Pumped liquid temperature range: from -10 °C to +120 °C - **Maximum operating pressure:** 10 bar (1000 kPa)

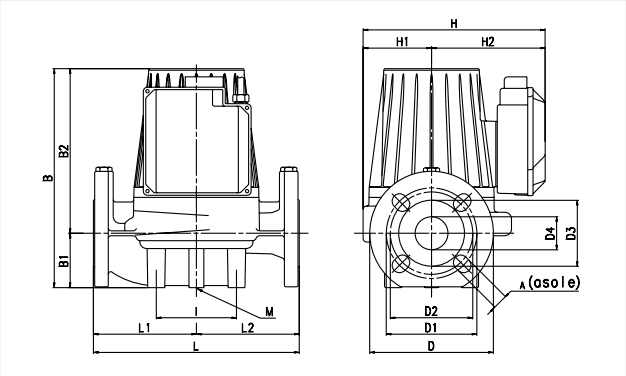

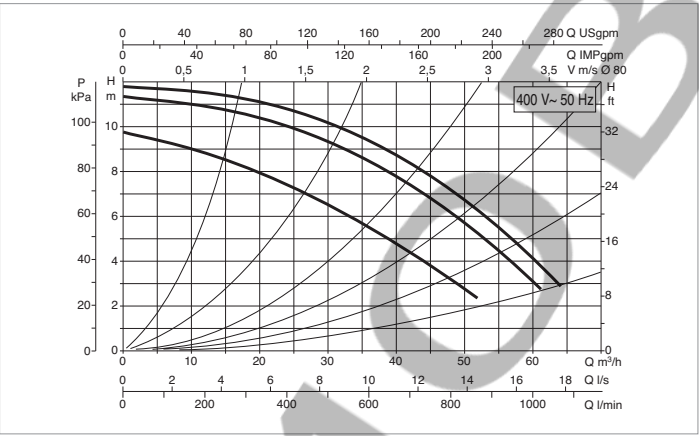

The performance curves are based on kinematic viscosity values = 1 mm²/s and density equal to 1000 kg/m³. Curve tolerance according to ISO 9906.

MODEL	CENTRE DISTANCE mm	FLANGES ON REQUEST	ELECTRICAL DATA					MINIMUM SUCTION PRESSURE				
			POWER INPUT 50 Hz	SPEED	REV. 1/min	P1 MAX W	In A	t°	75°	90 °	110°	120°
BPH 120/360.80 T	360	DN 80 - PN 10	3x230 V ~	2 1	2500 2340	1410 1292	3.95 3.6	m.c.a.	6	10	–	22
			3x400 V ~	3 2 1	2830 2780 2350	1820 1710 1302	3.3 2.93 2.13					

MODEL	L	L1	L2	A	B	B1	B2	D	D1	D2	D3	D4	I	I1	I2	I3	M	H	H1	H2	WEIGHT kg
BPH 120/360.80 T	360	170	190	18	404	97	307	200	160	150	130	80	115	–	–	–	M12	259	100	159	40

BPH 150/360.80 T - WET ROTOR CIRCULATORS FOR HEATING AND AIR CONDITIONING SYSTEMS - SINGOL, FLANGED

Pumped liquid temperature range: from -10 °C to +110 °C - **Maximum operating pressure:** 10 bar (1000 kPa)

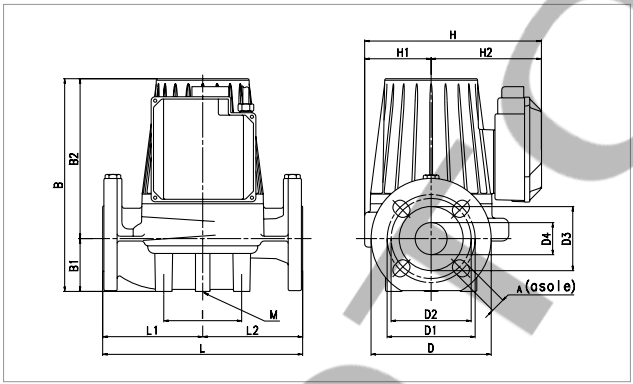

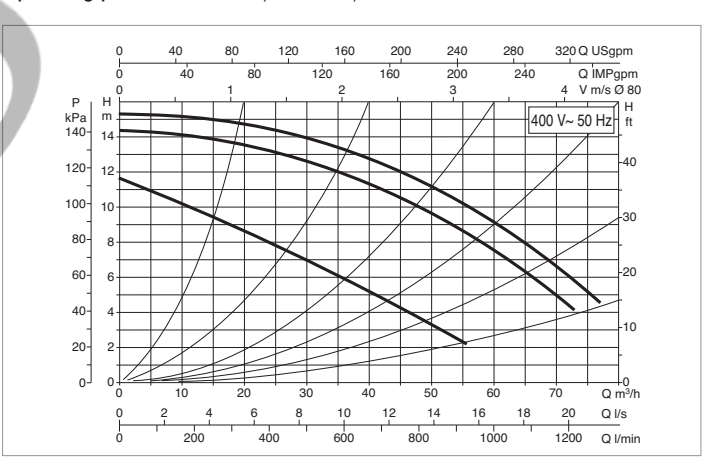

The performance curves are based on kinematic viscosity values = 1 mm²/s and density equal to 1000 kg/m³. Curve tolerance according to ISO 9906.

MODEL	CENTRE DISTANCE mm	FLANGES ON REQUEST	ELECTRICAL DATA					MINIMUM SUCTION PRESSURE				
			POWER INPUT 50 Hz	SPEED	REV. 1/min	P1 MAX W	In A	t°	75°	90 °	110°	120°
BPH 150/360.80 T	360	DN 80 - PN 10	3x230 V ~	2 1	2140 1900	1984 1695	5.62 4.82	m.c.a.	7	11	18	–
			3x400 V ~	3 2 1	2710 2610 1940	2870 2686 1710	4.64 4.32 2.85					

MODEL	L	L1	L2	A	B	B1	B2	D	D1	D2	D3	D4	I	I1	I2	I3	M	H	H1	H2	WEIGHT kg
BPH 150/360.80 T	360	170	190	18	404	97	307	200	160	150	130	80	115	–	–	–	M12	259	100	159	40

*** model available for all markets**

MODEL

BPH 180/360.80 T - WET ROTOR CIRCULATORS FOR HEATING AND AIR CONDITIONING SYSTEMS - SINGOL, FLANGED

Pumped liquid temperature range: from -10 °C to +110 °C - **Maximum operating pressure:** 10 bar (1000 kPa)

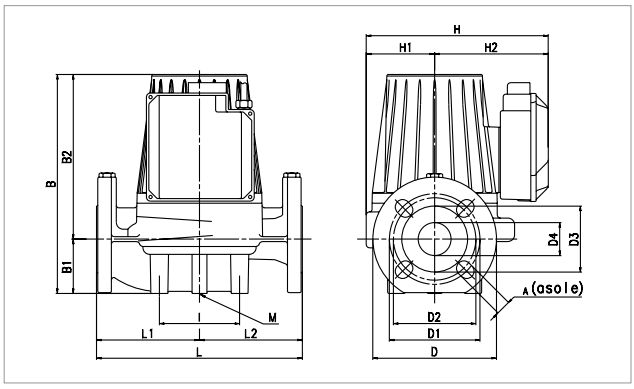

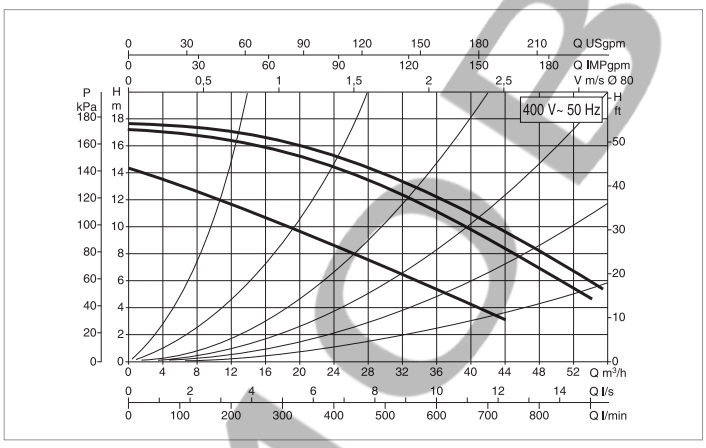

The performance curves are based on kinematic viscosity values = 1 mm²/s and density equal to 1000 kg/m³. Curve tolerance according to ISO 9906.

MODEL	CENTRE DISTANCE mm	FLANGES ON REQUEST	ELECTRICAL DATA					MINIMUM SUCTION PRESSURE				
			POWER INPUT 50 Hz	SPEED	REV. 1/min	P1 MAX W	In A	t°	75°	90 °	110°	120°
BPH 180/360.80 T	360	DN 80 - PN 10	3x230 V ~	2 1	2380 2170	1670 1490	4,7 4,25	m.c.a.	7	11	18	–
			3x400 V ~	3 2 1	2780 2700 2200	2310 2210 1490	4 3,5 2,4					

MODEL	L	L1	L2	A	B	B1	B2	D	D1	D2	D3	D4	I	I1	I2	I3	M	H	H1	H2	WEIGHT kg
BPH 180/360.80 T	360	170	190	18	404	97	307	200	160	150	130	80	115	–	–	–	M12	259	100	159	40

DMH 30/250.40 T - WET ROTOR CIRCULATORS FOR HEATING AND AIR CONDITIONING SYSTEMS - TWIN, FLANGED

Pumped liquid temperature range: from -10 °C to +120 °C - **Maximum operating pressure:** 10 bar (1000 kPa)

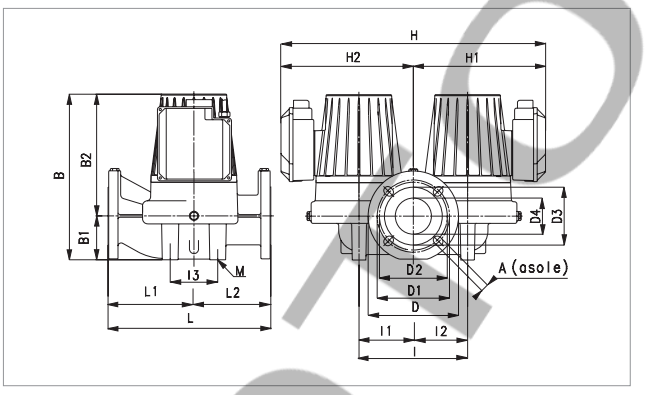

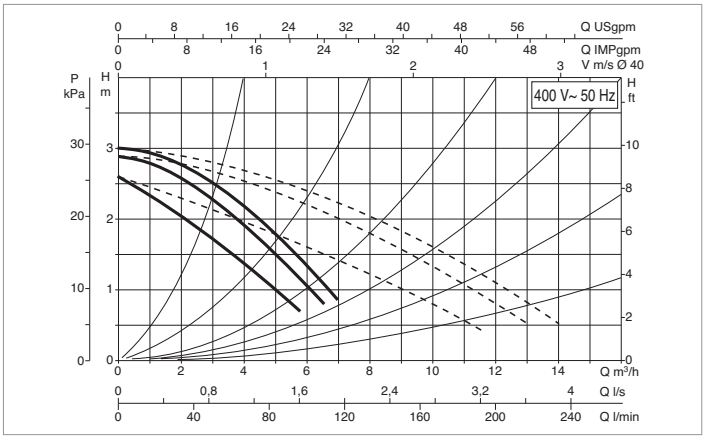

The performance curves are based on kinematic viscosity values = 1 mm²/s and density equal to 1000 kg/m³. Curve tolerance according to ISO 9906.

MODEL	CENTRE DISTANCE mm	FLANGES ON REQUEST	ELECTRICAL DATA					MINIMUM SUCTION PRESSURE				
			POWER INPUT 50 Hz	SPEED	REV. 1/min	P1 MAX W	In A	t°	75°	90 °	110°	120°
DMH 30/250.40 T	250	DN 40 - PN 10	3x230 V ~	2 1	1340 1260	100 88	0.48 0.39	m.c.a.	0.9	4	–	18
			3x400 V ~	3 2 1	1440 1430 1260	192 155 88	0.78 0.58 0.23					

MODEL	L	L1	L2	A	B	B1	B2	D	D1	D2	D3	D4	I	I1	I2	I3	M	H	H1	H2	WEIGHT kg
DMH 30/250.40 T	250	105	145	18	271	66	205	150	110	100	80	40	200	100	100	100	M12	476	238	238	32

MOTORMOB

DPH 60/250.40 M - WET ROTOR CIRCULATORS FOR HEATING AND AIR CONDITIONING SYSTEMS - TWIN, FLANGED

Pumped liquid temperature range: from -10 °C to +110 °C - **Maximum operating pressure:** 10 bar (1000 kPa)

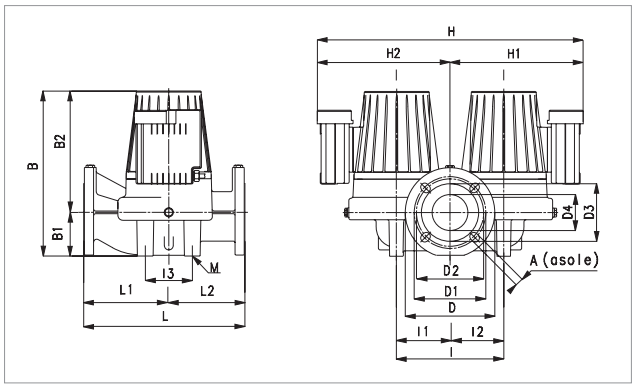

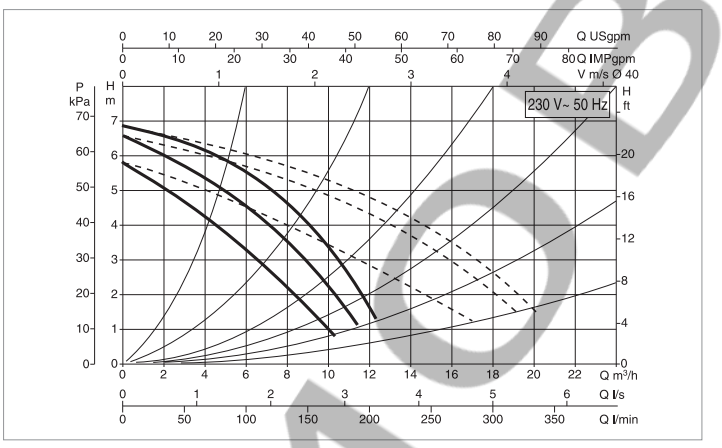

The performance curves are based on kinematic viscosity values = 1 mm²/s and density equal to 1000 kg/m³. Curve tolerance according to ISO 9906.

MODEL	CENTRE DISTANCE mm	FLANGES ON REQUEST	ELECTRICAL DATA					MINIMUM SUCTION PRESSURE				
			POWER INPUT 50 Hz	SPEED	REV. 1/min	P1 MAX W	In A	t°	75°	90 °	110°	120°
DPH 60/250.40 M	250	DN 40 - PN 10	–	–	–	–	–	m.c.a.	1.6	4	14	–
			1x230 V ~	3 2 1	2830 2750 2410	316 309 292	1.43 1.53 1.51					

MODEL	L	L1	L2	A	B	B1	B2	D	D1	D2	D3	D4	I	I1	I2	I3	M	H	H1	H2	WEIGHT kg
DPH 60/250.40 M	250	105	145	18	271	66	205	150	110	100	80	40	200	100	100	100	M12	476	238	238	32

DPH 60/250.40 T - WET ROTOR CIRCULATORS FOR HEATING AND AIR CONDITIONING SYSTEMS - TWIN, FLANGED

Pumped liquid temperature range: from -10 °C to +120 °C - **Maximum operating pressure:** 10 bar (1000 kPa)

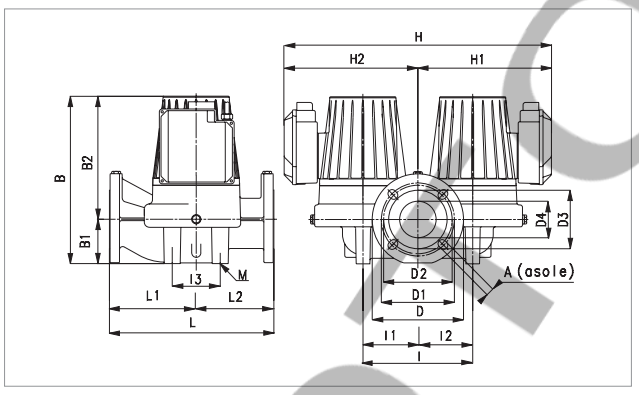

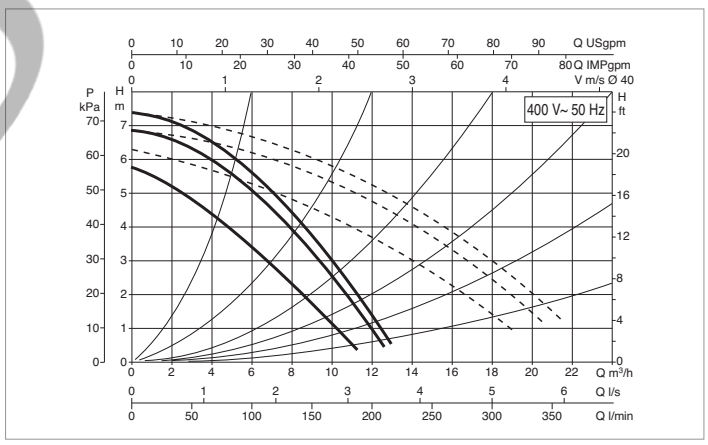

The performance curves are based on kinematic viscosity values = 1 mm²/s and density equal to 1000 kg/m³. Curve tolerance according to ISO 9906.

MODEL	CENTRE DISTANCE mm	FLANGES ON REQUEST	ELECTRICAL DATA					MINIMUM SUCTION PRESSURE				
			POWER INPUT 50 Hz	SPEED	REV. 1/min	P1 MAX W	In A	t°	75°	90 °	110°	120°
DPH 60/250.40 T	250	DN 40 - PN 10	3x230 V ~	2 1	2570 2420	253 229	0.81 0.72	m.c.a.	1.6	4	–	19
			3x400 V ~	3 2 1	2850 2810 2430	348 316 232	0.99 0.75 0.42					

MODEL	L	L1	L2	A	B	B1	B2	D	D1	D2	D3	D4	I	I1	I2	I3	M	H	H1	H2	WEIGHT kg
DPH 60/250.40 T	250	105	145	18	271	66	205	150	110	100	80	40	200	100	100	100	M12	476	238	238	32

MOTOR MOB

DPH 120/250.40 M - WET ROTOR CIRCULATORS FOR HEATING AND AIR CONDITIONING SYSTEMS - TWIN, FLANGED

Pumped liquid temperature range: from -10 °C to +110 °C - **Maximum operating pressure:** 10 bar (1000 kPa)

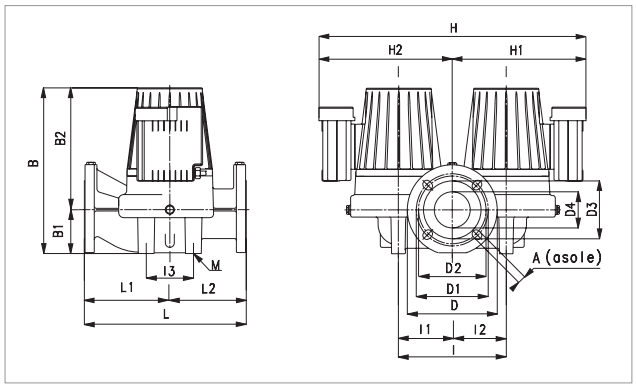

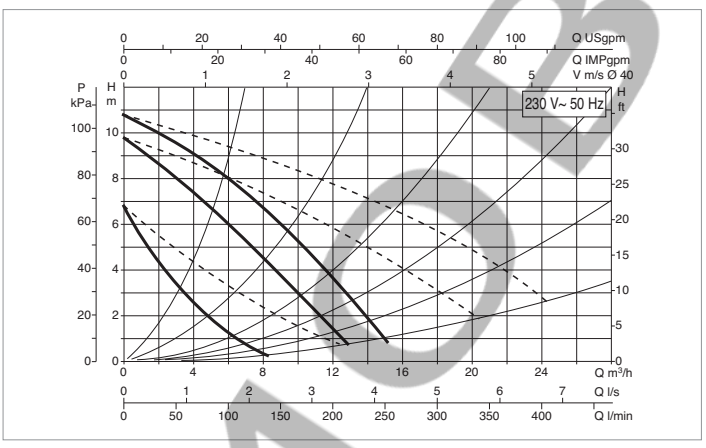

The performance curves are based on kinematic viscosity values = 1 mm²/s and density equal to 1000 kg/m³. Curve tolerance according to ISO 9906.

MODEL	CENTRE DISTANCE mm	FLANGES ON REQUEST	ELECTRICAL DATA					MINIMUM SUCTION PRESSURE				
			POWER INPUT 50 Hz	SPEED	REV. 1/min	P1 MAX W	In A	t°	75°	90 °	110°	120°
DPH 120/250.40 M	250	DN 40 - PN 10	–	–	–	–	–	m.c.a.	6	9	18	–
			1x230 V ~	3 2 1	2650 2320 1520	510 498 376	2.24 2.35 1.96					

MODEL	L	L1	L2	A	B	B1	B2	D	D1	D2	D3	D4	I	I1	I2	I3	M	H	H1	H2	WEIGHT kg
DPH 120/250.40 M	250	105	145	18	271	66	205	150	110	100	80	40	200	100	100	100	M12	476	238	238	32

DPH 120/250.40 T - WET ROTOR CIRCULATORS FOR HEATING AND AIR CONDITIONING SYSTEMS - TWIN, FLANGED

Pumped liquid temperature range: from -10 °C to +120 °C - **Maximum operating pressure:** 10 bar (1000 kPa)

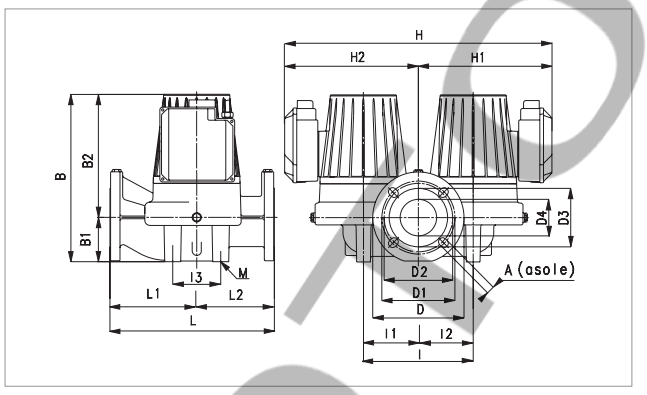

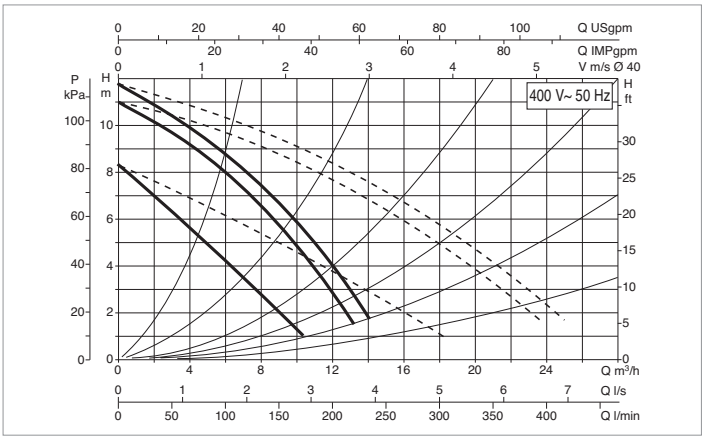

The performance curves are based on kinematic viscosity values = 1 mm²/s and density equal to 1000 kg/m³. Curve tolerance according to ISO 9906.

MODEL	CENTRE DISTANCE mm	FLANGES ON REQUEST	ELECTRICAL DATA					MINIMUM SUCTION PRESSURE				
			POWER INPUT 50 Hz	SPEED	REV. 1/min	P1 MAX W	In A	t°	75°	90 °	110°	120°
DPH 120/250.40 T	250	DN 40 - PN 10	3x230 V ~	2 1	2300 2070	395 340	1.2 1.07	m.c.a.	6	9	–	23
			3x400 V ~	3 2 1	2780 2710 2080	536 499 339	1.16 0.98 0.62					

MODEL	L	L1	L2	A	B	B1	B2	D	D1	D2	D3	D4	I	I1	I2	I3	M	H	H1	H2	WEIGHT kg
DPH 120/250.40 T	250	105	145	18	271	66	205	150	110	100	80	40	200	100	100	100	M12	476	238	238	32

MOTOR MOB

DMH 30/280.50 T - WET ROTOR CIRCULATORS FOR HEATING AND AIR CONDITIONING SYSTEMS - TWIN, FLANGED

Pumped liquid temperature range: from -10 °C to +120 °C - **Maximum operating pressure:** 10 bar (1000 kPa)

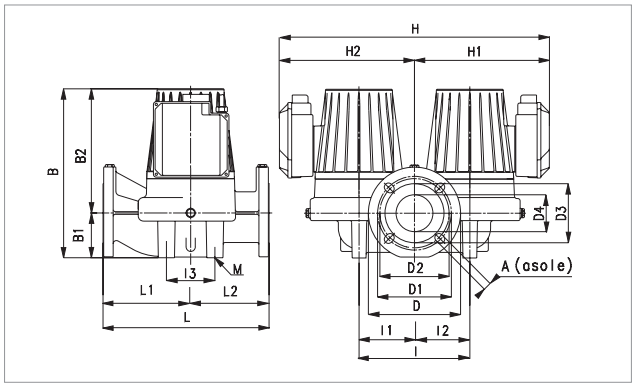

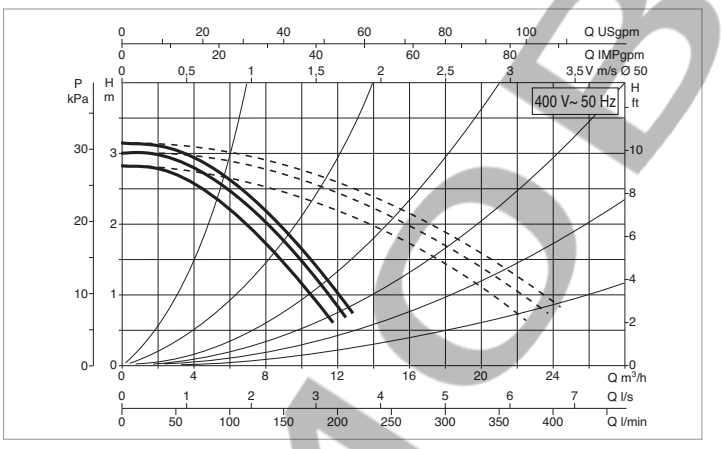

The performance curves are based on kinematic viscosity values = 1 mm²/s and density equal to 1000 kg/m³. Curve tolerance according to ISO 9906.

MODEL	CENTRE DISTANCE mm	FLANGES ON REQUEST	ELECTRICAL DATA					MINIMUM SUCTION PRESSURE				
			POWER INPUT 50 Hz	SPEED	REV. 1/min	P1 MAX W	In A	t°	75°	90 °	110°	120°
DMH 30/280.50 T	280	DN 50 - PN 10	3x230 V ~	2 1	1390 1340	148 134	0.7 0.55	m.c.a.	0.9	4	–	18
			3x400 V ~	3 2 1	1460 1450 1350	255 216 131	1.12 0.83 0.32					

MODEL	L	L1	L2	A	B	B1	B2	D	D1	D2	D3	D4	l	l1	l2	l3	M	H	H1	H2	WEIGHT kg
DMH 30/280.50 T	280	130	150	18	305	73	232	165	125	110	90	50	240	120	120	120	M14	552	276	276	51,5

DMH 60/280.50 T - WET ROTOR CIRCULATORS FOR HEATING AND AIR CONDITIONING SYSTEMS - TWIN, FLANGED

Pumped liquid temperature range: from -10 °C to +120 °C - **Maximum operating pressure:** 10 bar (1000 kPa)

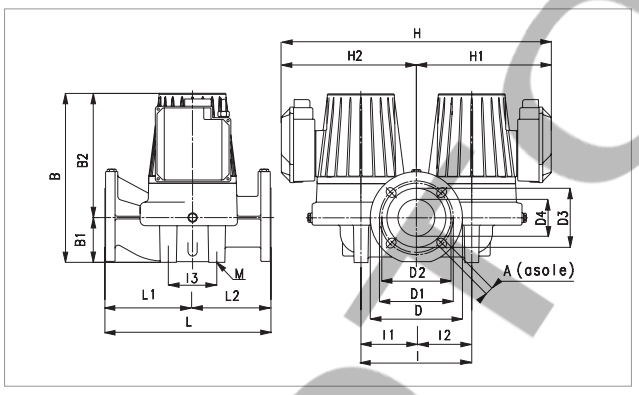

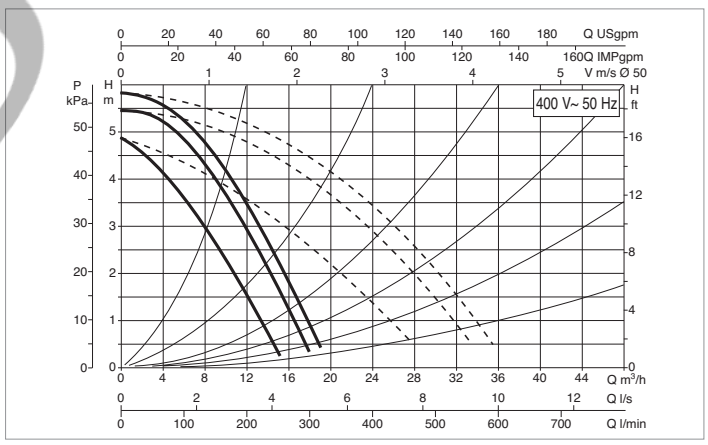

The performance curves are based on kinematic viscosity values = 1 mm²/s and density equal to 1000 kg/m³. Curve tolerance according to ISO 9906.

MODEL	CENTRE DISTANCE mm	FLANGES ON REQUEST	ELECTRICAL DATA					MINIMUM SUCTION PRESSURE				
			POWER INPUT 50 Hz	SPEED	REV. 1/min	P1 MAX W	In A	t°	75°	90 °	110°	120°
DMH 60/280.50 T	280	DN 50 - PN 10	3x230 V ~	2 1	1210 1120	272 240	0.94 0.8	m.c.a.	4	7.5	–	21
			3x400 V ~	3 2 1	1400 1360 1130	410 367 235	1.2 0.95 0.46					

MODEL	L	L1	L2	A	B	B1	B2	D	D1	D2	D3	D4	l	l1	l2	l3	M	H	H1	H2	WEIGHT kg
DMH 60/280.50 T	280	130	150	18	308	73	235	165	125	110	90	50	240	120	120	120	M14	556	278	278	44,5

MOBYMOB

DPH 60/280.50 M - WET ROTOR CIRCULATORS FOR HEATING AND AIR CONDITIONING SYSTEMS - TWIN, FLANGED

Pumped liquid temperature range: from -10 °C to +120 °C - Maximum operating pressure: 10 bar (1000 kPa)

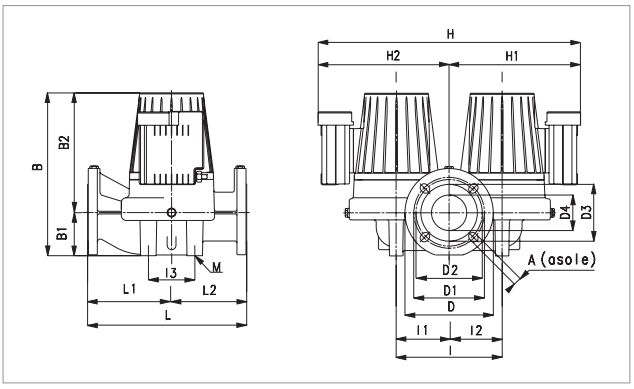

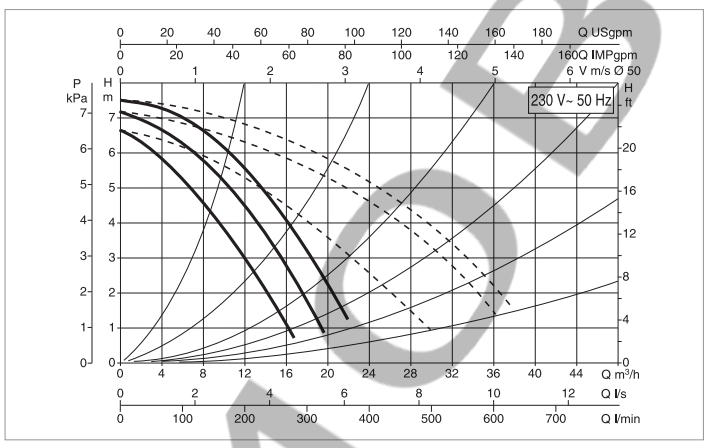

The performance curves are based on kinematic viscosity values = 1 mm²/s and density equal to 1000 kg/m³. Curve tolerance according to ISO 9906.

MODEL	CENTRE DISTANCE mm	FLANGES ON REQUEST	ELECTRICAL DATA					MINIMUM SUCTION PRESSURE				
			POWER INPUT 50 Hz	SPEED	REV. 1/min	P1 MAX W	In A	t°	75°	90 °	110°	120°
DPH 60/280.50 M	280	DN 50 - PN 10	–	–	–	–	–	m.c.a.	1.6	6	14	–
			1x230 V ~	3 2 1	2840 2730 2200	595 540 506	2.79 2.45 2.58					

MODEL	L	L1	L2	A	B	B1	B2	D	D1	D2	D3	D4	l	l1	l2	l3	M	H	H1	H2	WEIGHT kg
DPH 60/280.50 M	280	130	150	18	308	73	235	165	125	110	90	50	240	120	120	120	M14	554	278	278	44,5

DPH 60/280.50 T - WET ROTOR CIRCULATORS FOR HEATING AND AIR CONDITIONING SYSTEMS - TWIN, FLANGED

Pumped liquid temperature range: from -10 °C to +120 °C - Maximum operating pressure: 10 bar (1000 kPa)

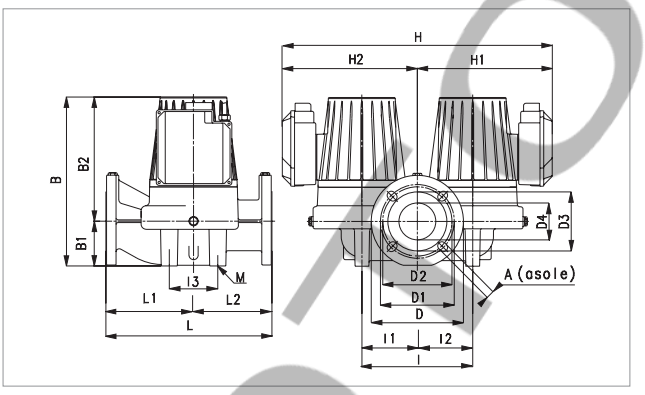

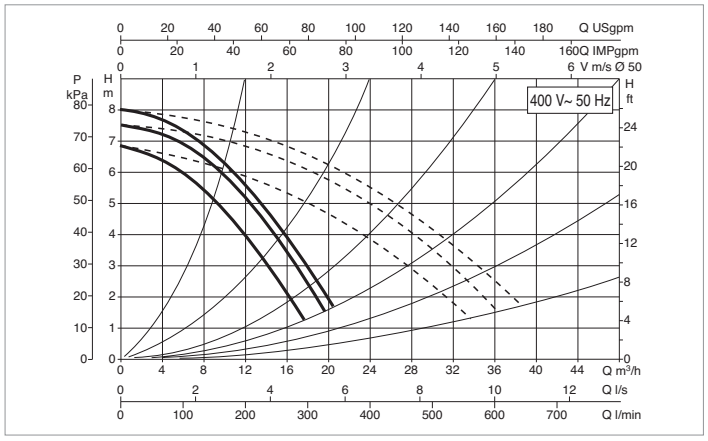

The performance curves are based on kinematic viscosity values = 1 mm²/s and density equal to 1000 kg/m³. Curve tolerance according to ISO 9906.

MODEL	CENTRE DISTANCE mm	FLANGES ON REQUEST	ELECTRICAL DATA					MINIMUM SUCTION PRESSURE				
			POWER INPUT 50 Hz	SPEED	REV. 1/min	P1 MAX W	In A	t°	75°	90 °	110°	120°
DPH 60/280.50 T	280	DN 50 - PN 10	3x230 V ~	2 1	2670 2570	464 432	1.35 1.23	m.c.a.	1.6	6	–	19
			3x400 V ~	3 2 1	2890 2860 2570	589 546 423	1.31 1.1 0.71					

MODEL	L	L1	L2	A	B	B1	B2	D	D1	D2	D3	D4	l	l1	l2	l3	M	H	H1	H2	WEIGHT kg
DPH 60/280.50 T	280	130	150	18	308	73	235	165	125	110	90	50	240	120	120	120	M14	554	278	278	44,5

MOTOR MOB

DPH 120/280.50 M - WET ROTOR CIRCULATORS FOR HEATING AND AIR CONDITIONING SYSTEMS - TWIN, FLANGED

Pumped liquid temperature range: from -10 °C to +90 °C - **Maximum operating pressure:** 10 bar (1000 kPa)

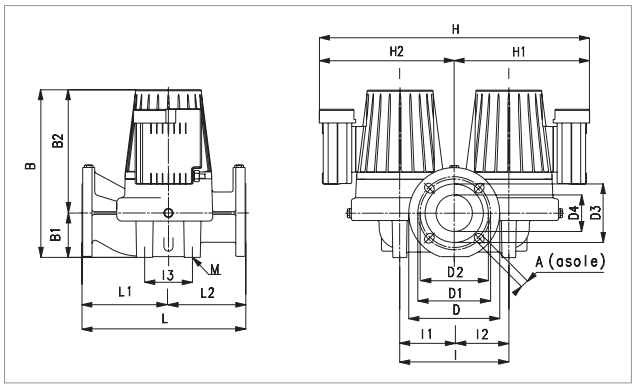

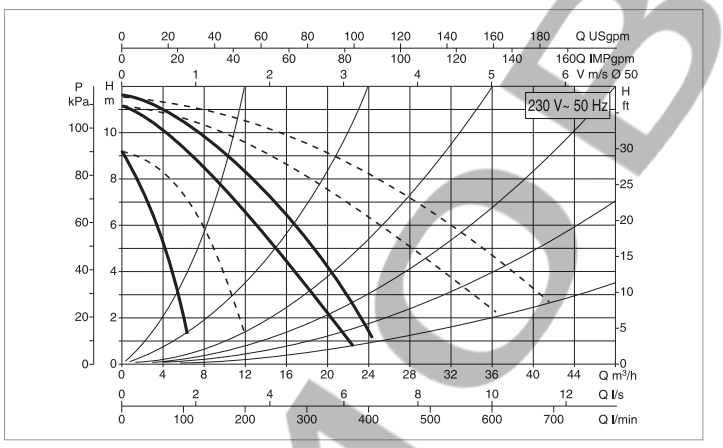

The performance curves are based on kinematic viscosity values = 1 mm²/s and density equal to 1000 kg/m³. Curve tolerance according to ISO 9906.

MODEL	CENTRE DISTANCE mm	FLANGES ON REQUEST	ELECTRICAL DATA					MINIMUM SUCTION PRESSURE				
			POWER INPUT 50 Hz	SPEED	REV. 1/min	P1 MAX W	In A	t°	75°	90 °	110°	120°
DPH 120/280.50 M	280	DN 50 - PN 10	–	–	–	–	–	m.c.a.	2	5	–	20
			1x230 V ~	3 2 1	2690 2360 1340	870 800 590	3,97 3,69 3,12					

MODEL	L	L1	L2	A	B	B1	B2	D	D1	D2	D3	D4	l	l1	l2	l3	M	H	H1	H2	WEIGHT kg
DPH 120/280.50 M	280	130	150	18	308	73	235	165	125	110	90	50	240	120	120	120	M14	556	278	278	44,5

DPH 120/280.50 T - WET ROTOR CIRCULATORS FOR HEATING AND AIR CONDITIONING SYSTEMS - TWIN, FLANGED

Pumped liquid temperature range: from -10 °C to +120 °C - **Maximum operating pressure:** 10 bar (1000 kPa)

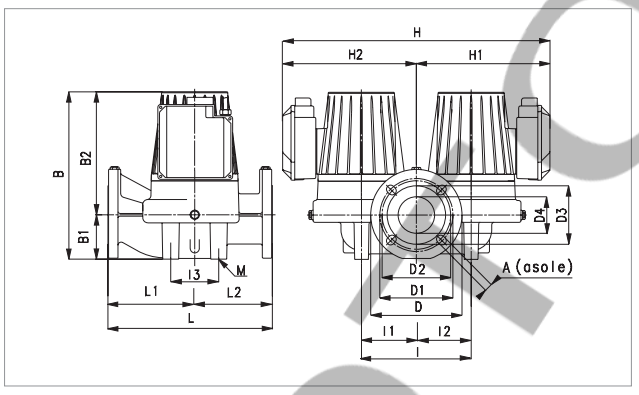

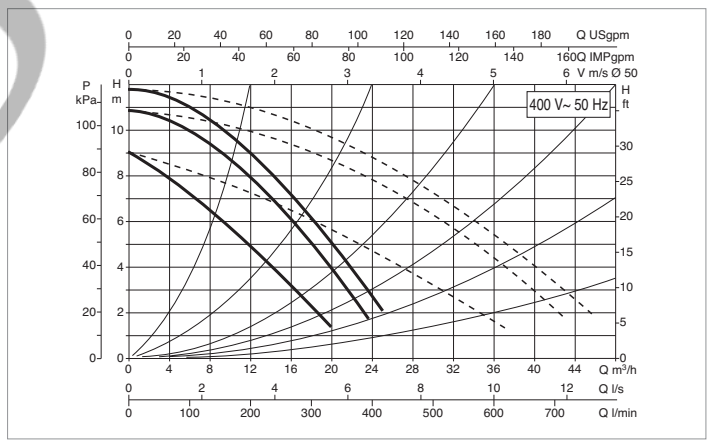

The performance curves are based on kinematic viscosity values = 1 mm²/s and density equal to 1000 kg/m³. Curve tolerance according to ISO 9906.

MODEL	CENTRE DISTANCE mm	FLANGES ON REQUEST	ELECTRICAL DATA					MINIMUM SUCTION PRESSURE				
			POWER INPUT 50 Hz	SPEED	REV. 1/min	P1 MAX W	In A	t°	75°	90 °	110°	120°
DPH 120/280.50 T	280	DN 50 - PN 10	3x230 V ~	2 1	2430 2240	683 605	1.95 1.75	m.c.a.	2	5	–	20
			3x400 V ~	3 2 1	2810 2740 2260	898 840 603	1.67 1.47 1					

MODEL	L	L1	L2	A	B	B1	B2	D	D1	D2	D3	D4	l	l1	l2	l3	M	H	H1	H2	WEIGHT kg
DPH 120/280.50 T	280	130	150	18	308	73	235	165	125	110	90	50	240	120	120	120	M14	556	278	278	49

MOTOR MOB

DPH 150/280.50 T - WET ROTOR CIRCULATORS FOR HEATING AND AIR CONDITIONING SYSTEMS - TWIN, FLANGED

Pumped liquid temperature range: from -10 °C to +110 °C - **Maximum operating pressure:** 10 bar (1000 kPa)

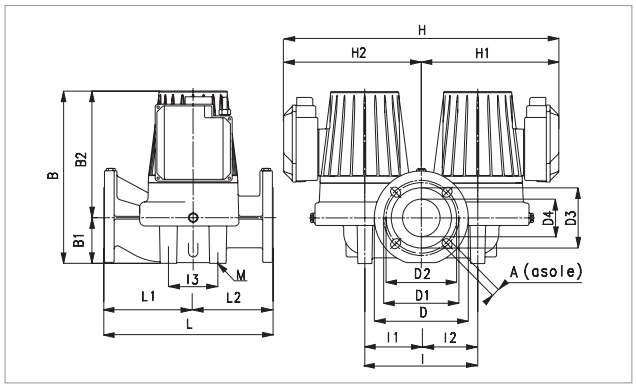

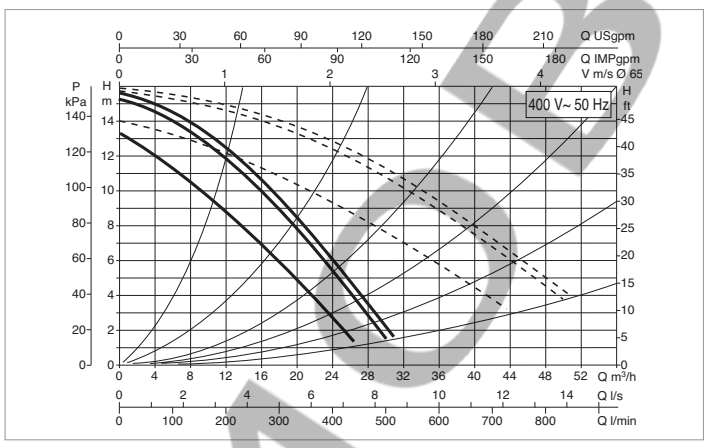

The performance curves are based on kinematic viscosity values = 1 mm²/s and density equal to 1000 kg/m³. Curve tolerance according to ISO 9906.

MODEL	CENTRE DISTANCE mm	FLANGES ON REQUEST	ELECTRICAL DATA					MINIMUM SUCTION PRESSURE				
			POWER INPUT 50 Hz	SPEED	REV. 1/min	P1 MAX W	In A	t°	75°	90 °	110°	120°
DPH 150/280.50 T	280	DN 50 - PN 10	3x230 V ~	2 1	2553 2420	1130 1032	3.22 3	m.c.a.	2	5	–	20
			3x400 V ~	3 2 1	2850 2802 2425	1470 1360 1030	2.9 2.5 1.7					

MODEL	L	L1	L2	A	B	B1	B2	D	D1	D2	D3	D4	I	I1	I2	I3	M	H	H1	H2	WEIGHT kg
DPH 150/280.50 T	280	130	150	18	358	73	285	165	125	110	90	50	240	120	120	120	M14	556	278	278	49

DPH 180/280.50 T - WET ROTOR CIRCULATORS FOR HEATING AND AIR CONDITIONING SYSTEMS - TWIN, FLANGED

Pumped liquid temperature range: from -10 °C to +110 °C - **Maximum operating pressure:** 10 bar (1000 kPa)

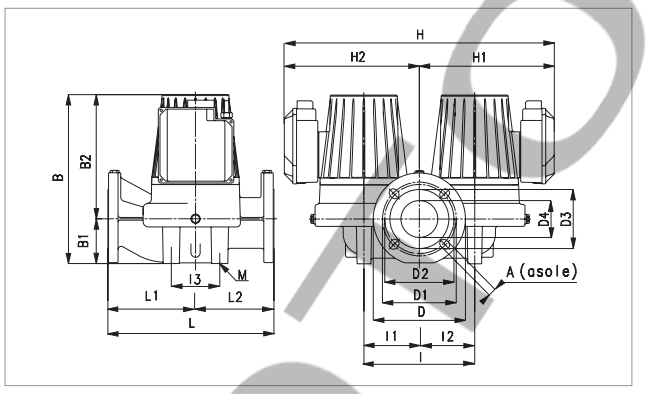

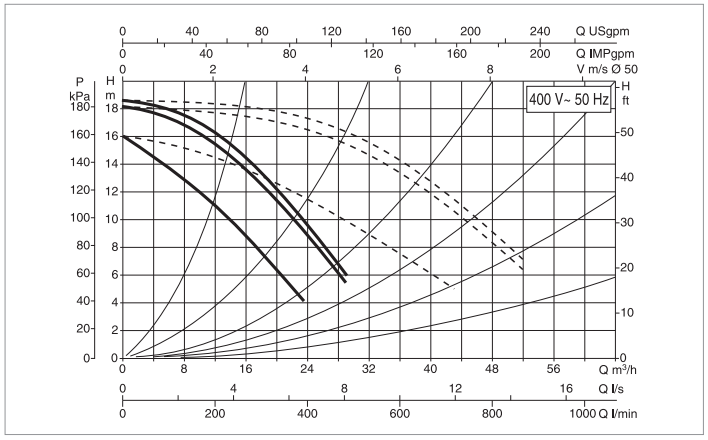

The performance curves are based on kinematic viscosity values = 1 mm²/s and density equal to 1000 kg/m³. Curve tolerance according to ISO 9906.

MODEL	CENTRE DISTANCE mm	FLANGES ON REQUEST	ELECTRICAL DATA					MINIMUM SUCTION PRESSURE				
			POWER INPUT 50 Hz	SPEED	REV. 1/min	P1 MAX W	In A	t°	75°	90 °	110°	120°
DPH 180/280.50 T	280	DN 50 - PN 10	3x230 V ~	2 1	2520 2340	1230 1120	3,5 3,2	m.c.a.	2	5	–	20
			3x400 V ~	3 2 1	2830 2780 2360	1630 1540 1130	3 2,70 1,85					

MODEL	L	L1	L2	A	B	B1	B2	D	D1	D2	D3	D4	I	I1	I2	I3	M	H	H1	H2	WEIGHT kg
DPH 180/280.50 T	280	130	150	18	358	73	285	165	125	110	90	50	240	120	120	120	M14	556	278	278	49

MOTOR-MOB

DMH 30/340.65 T- WET ROTOR CIRCULATORS FOR HEATING AND AIR CONDITIONING SYSTEMS - TWIN, FLANGED

Pumped liquid temperature range: from -10 °C to +120 °C - **Maximum operating pressure:** 10 bar (1000 kPa)

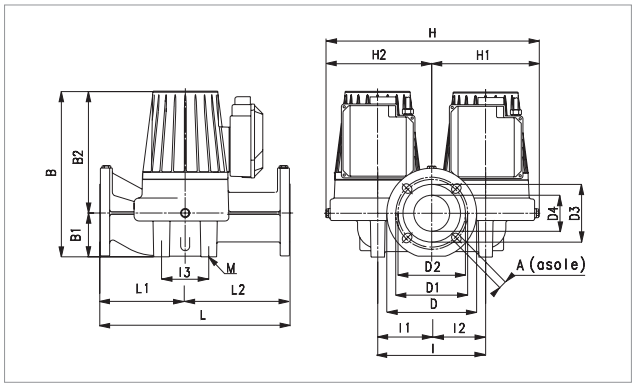

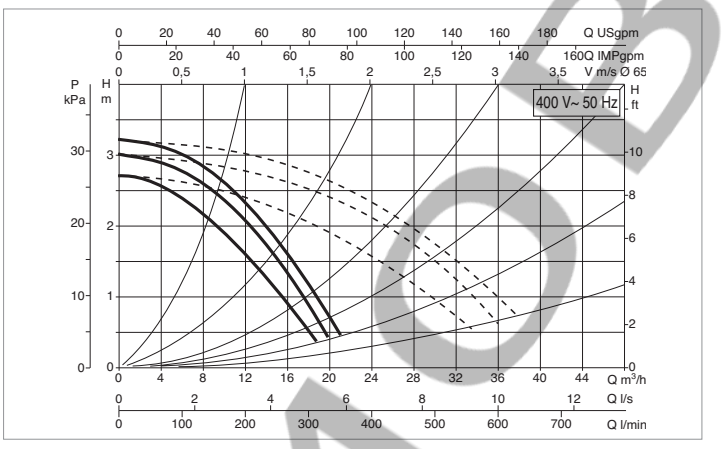

The performance curves are based on kinematic viscosity values = 1 mm²/s and density equal to 1000 kg/m³. Curve tolerance according to ISO 9906.

MODEL	CENTRE DISTANCE mm	FLANGES ON REQUEST	ELECTRICAL DATA					MINIMUM SUCTION PRESSURE				
			POWER INPUT 50 Hz	SPEED	REV. 1/min	P1 MAX W	In A	t°	75°	90 °	110°	120°
DMH 30/340.65 T	340	DN 65 - PN 10	3x230 V ~	2 1	1360 1310	170 154	0.73 0.60	m.c.a.	4	7.5	–	21
			3x400 V ~	3 2 1	1450 1430 1310	270 233 150	1.12 0.84 0.35					

MODEL	L	L1	L2	A	B	B1	B2	D	D1	D2	D3	D4	I	I1	I2	I3	M	H	H1	H2	WEIGHT kg
DMH 30/340.65 T	340	138,5	201,5	18	328	82	246	185	145	130	110	65	240	120	120	140	M14	476	238	238	57

DMH 60/340.65 T - WET ROTOR CIRCULATORS FOR HEATING AND AIR CONDITIONING SYSTEMS - TWIN, FLANGED

Pumped liquid temperature range: from -10 °C to +120 °C - **Maximum operating pressure:** 10 bar (1000 kPa)

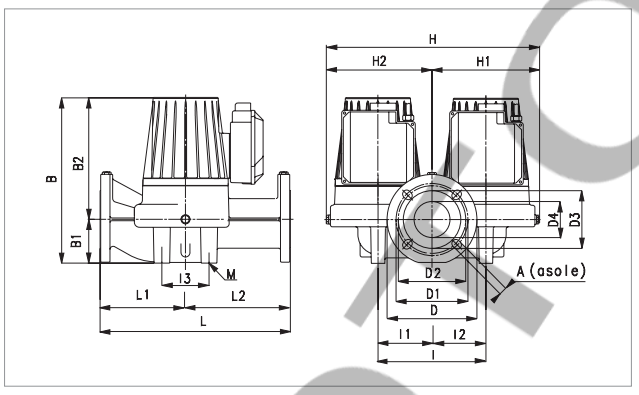

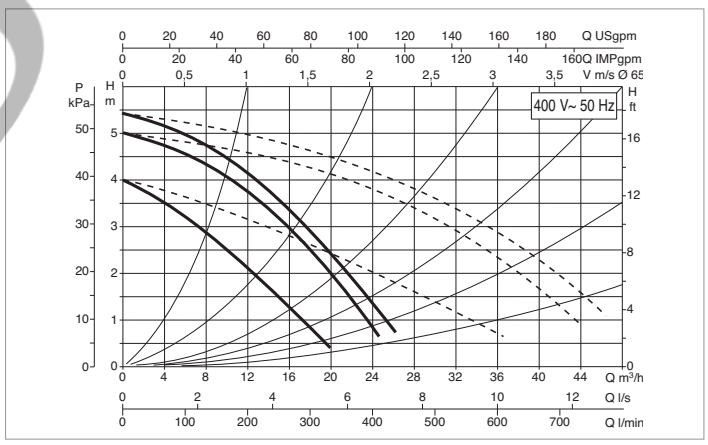

The performance curves are based on kinematic viscosity values = 1 mm²/s and density equal to 1000 kg/m³. Curve tolerance according to ISO 9906.

MODEL	CENTRE DISTANCE mm	FLANGES ON REQUEST	ELECTRICAL DATA					MINIMUM SUCTION PRESSURE				
			POWER INPUT 50 Hz	SPEED	REV. 1/min	P1 MAX W	In A	t°	75°	90 °	110°	120°
DMH 60/340.65 T	340	DN 65 - PN 10	3x230 V ~	2 1	1170 1070	295 257	1 0.85	m.c.a.	4	7.5	–	21
			3x400 V ~	3 2 1	1380 1350 1090	445 403 255	1.2 0.97 0.49					

MODEL	L	L1	L2	A	B	B1	B2	D	D1	D2	D3	D4	I	I1	I2	I3	M	H	H1	H2	WEIGHT kg
DMH 60/340.65 T	340	138,5	201,5	18	331	82	249	185	145	130	110	65	240	120	120	140	M14	476	238	238	50

MOTORYMOB

DPH 60/340.65 M - WET ROTOR CIRCULATORS FOR HEATING AND AIR CONDITIONING SYSTEMS - TWIN, FLANGED

Pumped liquid temperature range: from -10 °C to +110 °C - **Maximum operating pressure:** 10 bar (1000 kPa)

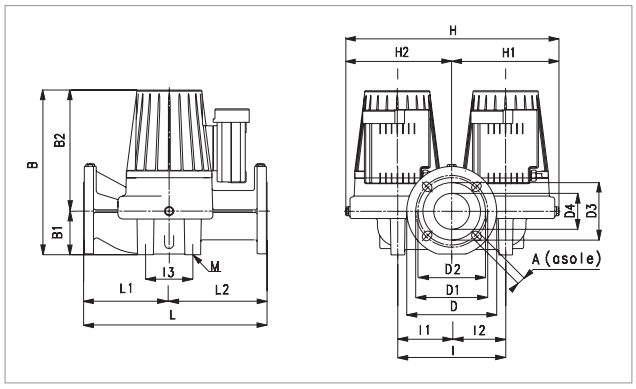

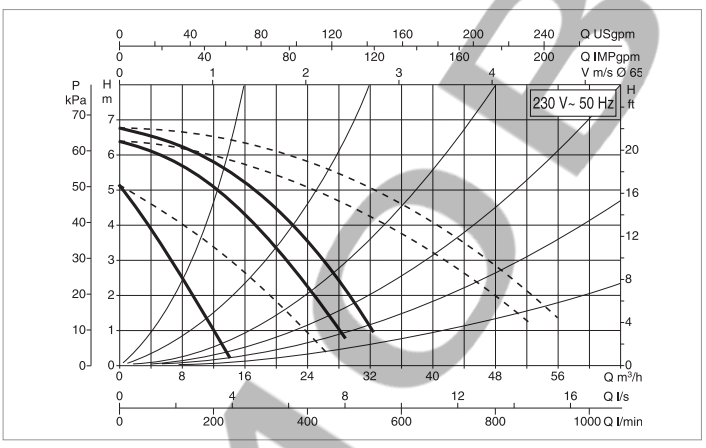

The performance curves are based on kinematic viscosity values = 1 mm²/s and density equal to 1000 kg/m³. Curve tolerance according to ISO 9906.

MODEL	CENTRE DISTANCE mm	FLANGES ON REQUEST	ELECTRICAL DATA					MINIMUM SUCTION PRESSURE				
			POWER INPUT 50 Hz	SPEED	REV. 1/min	P1 MAX W	In A	t°	75°	90 °	110°	120°
DPH 60/340.65 M	340	DN 65 - PN 10	–	–	–	–	–	m.c.a.	1	4	13	–
			1x230 V ~	3 2 1	2780 2580 1460	735 685 564	3.37 3.13 3.12					

MODEL	L	L1	L2	A	B	B1	B2	D	D1	D2	D3	D4	l	l1	l2	l3	M	H	H1	H2	WEIGHT kg
DPH 60/340.65 M	340	138,5	201,5	18	331	82	249	185	145	130	110	65	240	120	120	140	M14	476	238	238	50

DPH 60/340.65 T - WET ROTOR CIRCULATORS FOR HEATING AND AIR CONDITIONING SYSTEMS - TWIN, FLANGED

Pumped liquid temperature range: from -10 °C to +120 °C - **Maximum operating pressure:** 10 bar (1000 kPa)

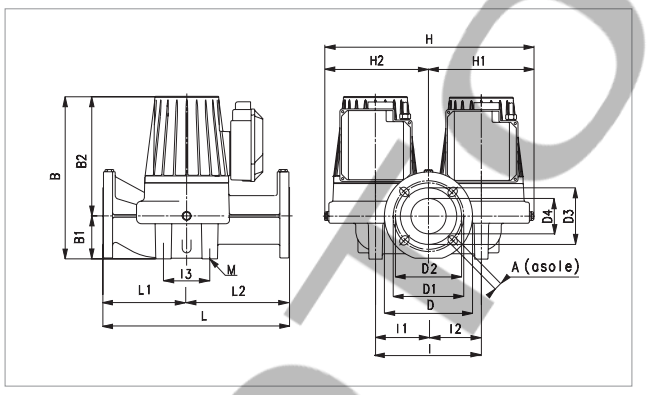

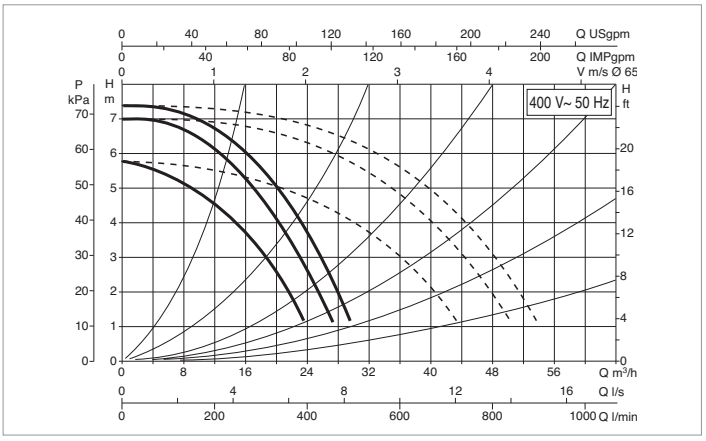

The performance curves are based on kinematic viscosity values = 1 mm²/s and density equal to 1000 kg/m³. Curve tolerance according to ISO 9906.

MODEL	CENTRE DISTANCE mm	FLANGES ON REQUEST	ELECTRICAL DATA					MINIMUM SUCTION PRESSURE				
			POWER INPUT 50 Hz	SPEED	REV. 1/min	P1 MAX W	In A	t°	75°	90 °	110°	120°
DPH 60/340.65 T	340	DN 65 - PN 10	3x230 V ~	2 1	2550 2380	582 532	1.67 1.53	m.c.a.	1	4	–	18
			3x400 V ~	3 2 1	2850 2800 2400	756 705 535	1.5 1.3 0.9					

MODEL	L	L1	L2	A	B	B1	B2	D	D1	D2	D3	D4	l	l1	l2	l3	M	H	H1	H2	WEIGHT kg
DPH 60/340.65 T	340	138,5	201,5	18	331	82	249	185	145	130	110	65	240	120	120	140	M14	476	238	238	54,5

MOTOR MOB

DPH 120/340.65 T - WET ROTOR CIRCULATORS FOR HEATING AND AIR CONDITIONING SYSTEMS - TWIN, FLANGED

Pumped liquid temperature range: from -10 °C to +110 °C - **Maximum operating pressure:** 10 bar (1000 kPa)

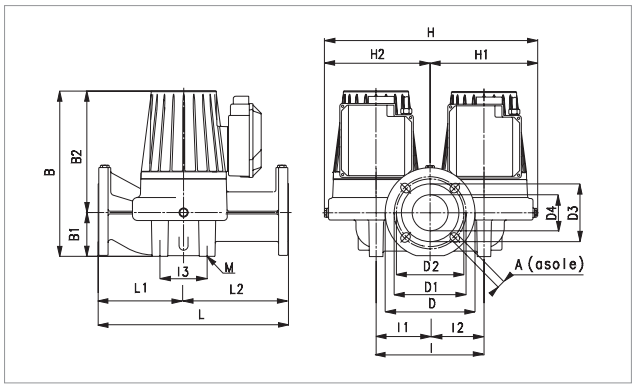

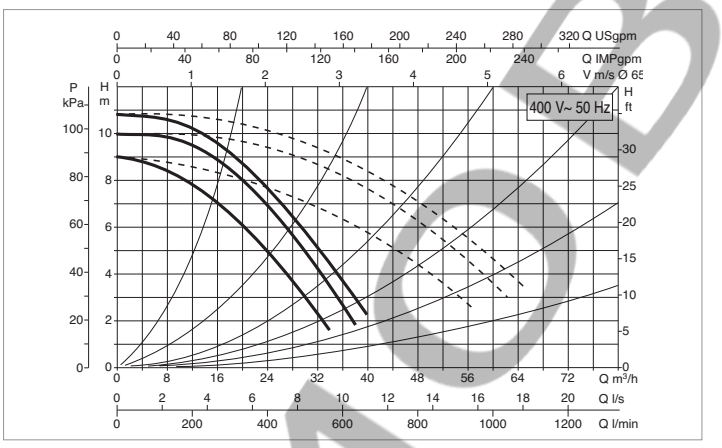

The performance curves are based on kinematic viscosity values = 1 mm²/s and density equal to 1000 kg/m³. Curve tolerance according to ISO 9906.

MODEL	CENTRE DISTANCE mm	FLANGES ON REQUEST	ELECTRICAL DATA					MINIMUM SUCTION PRESSURE				
			POWER INPUT 50 Hz	SPEED	REV. 1/min	P1 MAX W	In A	t°	75°	90 °	110°	120°
DPH 120/340.65 T	340	DN 65 - PN 10	3x230 V ~	2 1	2630 2500	1001 940	2.85 2.66	m.c.a.	6	9	–	22
			3x400 V ~	3 2 1	2880 2830 2520	1275 1200 934	2.64 2.25 1.52					

MODEL	L	L1	L2	A	B	B1	B2	D	D1	D2	D3	D4	I	I1	I2	I3	M	H	H1	H2	WEIGHT kg
DPH 120/340.65 T	340	138,5	201,5	18	381	82	299	185	145	130	110	65	240	120	120	140	M14	476	238	238	59

DPH 150/340.65 T - WET ROTOR CIRCULATORS FOR HEATING AND AIR CONDITIONING SYSTEMS - TWIN, FLANGED

Pumped liquid temperature range: from -10 °C to +110 °C - **Maximum operating pressure:** 10 bar (1000 kPa)

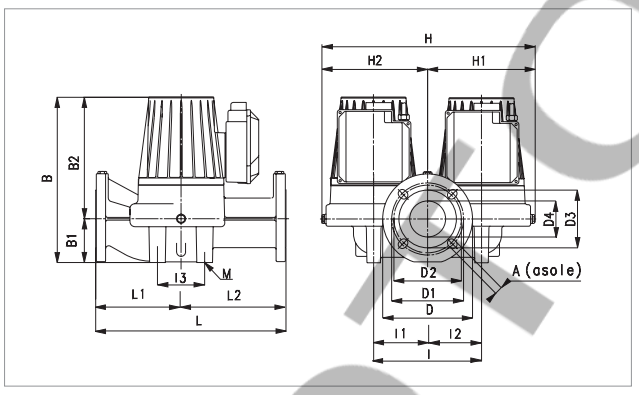

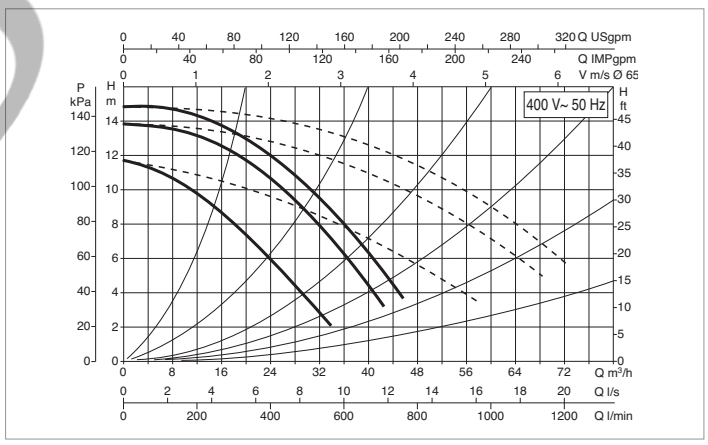

The performance curves are based on kinematic viscosity values = 1 mm²/s and density equal to 1000 kg/m³. Curve tolerance according to ISO 9906.

MODEL	CENTRE DISTANCE mm	FLANGES ON REQUEST	ELECTRICAL DATA					MINIMUM SUCTION PRESSURE				
			POWER INPUT 50 Hz	SPEED	REV. 1/min	P1 MAX W	In A	t°	75°	90 °	110°	120°
DPH 150/340.65 T	340	DN 65 - PN 10	3x230 V ~	2 1	2410 2250	1345 1188	3.8 3.36	m.c.a.	7	11	18	–
			3x400 V ~	3 2 1	2800 2730 2250	1796 1690 1210	3.25 2.93 2					

MODEL	L	L1	L2	A	B	B1	B2	D	D1	D2	D3	D4	I	I1	I2	I3	M	H	H1	H2	WEIGHT kg
DPH 150/340.65 T	340	138,5	201,5	18	381	82	299	185	145	130	110	65	240	120	120	140	M14	476	238	238	59

MOD. TYMOB

DPH 180/340.65 T - WET ROTOR CIRCULATORS FOR HEATING AND AIR CONDITIONING SYSTEMS - TWIN, FLANGED

Pumped liquid temperature range: from -10 °C to +110 °C - **Maximum operating pressure:** 10 bar (1000 kPa)

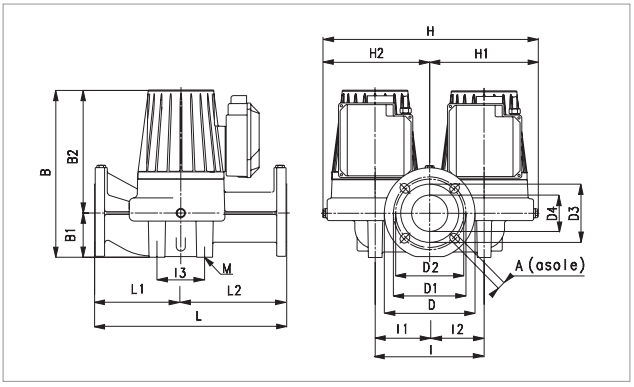

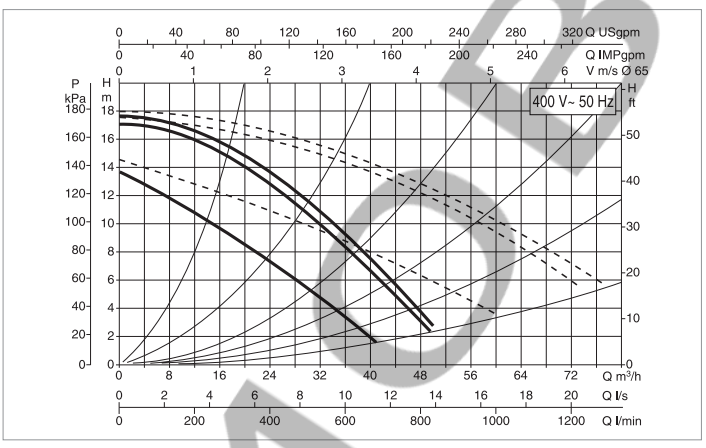

The performance curves are based on kinematic viscosity values = 1 mm²/s and density equal to 1000 kg/m³. Curve tolerance according to ISO 9906.

MODEL	CENTRE DISTANCE mm	FLANGES ON REQUEST	ELECTRICAL DATA					MINIMUM SUCTION PRESSURE				
			POWER INPUT 50 Hz	SPEED	REV. 1/min	P1 MAX W	In A	t°	75°	90 °	110°	120°
DPH 180/340.65 T	340	DN 65 - PN 10	3x230 V ~	2 1	2380 2170	1670 1490	4,7 4,25	m.c.a.	7	11	18	–
			3x400 V ~	3 2 1	2780 2700 2200	2310 2210 1490	4 3,5 2,4					

MODEL	L	L1	L2	A	B	B1	B2	D	D1	D2	D3	D4	l	l1	l2	l3	M	H	H1	H2	WEIGHT kg
DPH 180/340.65 T	340	138,5	201,5	18	381	82	299	185	145	130	110	65	240	120	120	140	M14	476	238	238	59

DMH 30/360.80 T - WET ROTOR CIRCULATORS FOR HEATING AND AIR CONDITIONING SYSTEMS - TWIN, FLANGED

Pumped liquid temperature range: from -10 °C to +120 °C - **Maximum operating pressure:** 10 bar (1000 kPa)

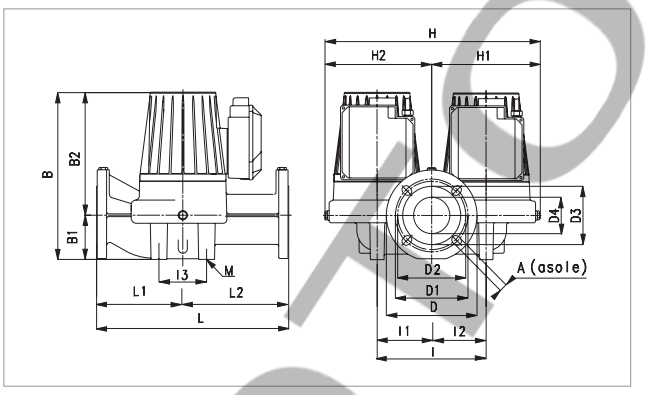

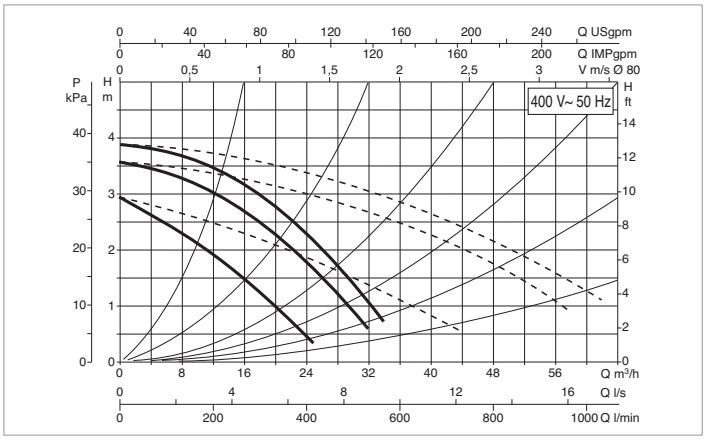

The performance curves are based on kinematic viscosity values = 1 mm²/s and density equal to 1000 kg/m³. Curve tolerance according to ISO 9906.

MODEL	CENTRE DISTANCE mm	FLANGES ON REQUEST	ELECTRICAL DATA					MINIMUM SUCTION PRESSURE				
			POWER INPUT 50 Hz	SPEED	REV. 1/min	P1 MAX W	In A	t°	75°	90 °	110°	120°
DMH 30/360.80 T	360	DN 80 - PN 10	3x230 V ~	2 1	1110 1010	313 268	1.05 0.88	m.c.a.	4	7.5	–	21
			3x400 V ~	3 2 1	1370 1330 1030	484 437 266	1.23 1 0.51					

MODEL	L	L1	L2	A	B	B1	B2	D	D1	D2	D3	D4	l	l1	l2	l3	M	H	H1	H2	WEIGHT kg
DMH 30/360.80 T	360	160	200	18	345	97	248	200	160	150	130	80	240	120	120	150	M14	480	240	240	54,5

MOTOR MOB

DMH 60/360.80 T - WET ROTOR CIRCULATORS FOR HEATING AND AIR CONDITIONING SYSTEMS - TWIN, FLANGED

Pumped liquid temperature range: from -10 °C to +120 °C - **Maximum operating pressure:** 10 bar (1000 kPa)

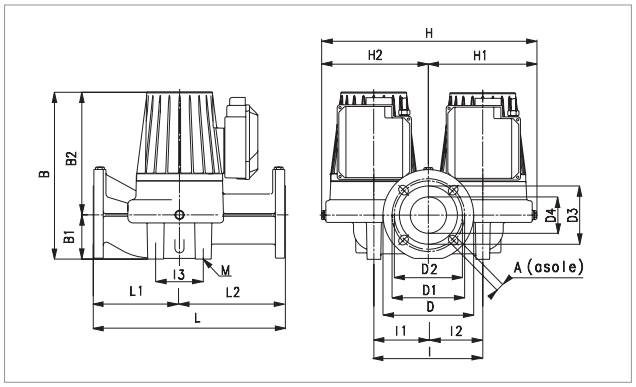

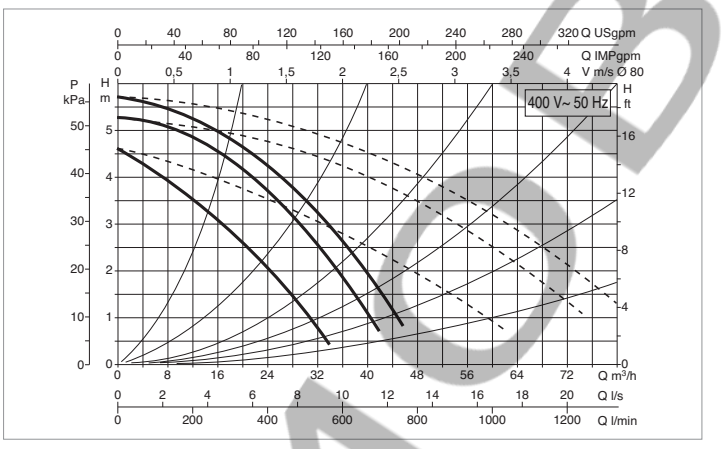

The performance curves are based on kinematic viscosity values = 1 mm²/s and density equal to 1000 kg/m³. Curve tolerance according to ISO 9906.

MODEL	CENTRE DISTANCE mm	FLANGES ON REQUEST	ELECTRICAL DATA					MINIMUM SUCTION PRESSURE				
			POWER INPUT 50 Hz	SPEED	REV. 1/min	P1 MAX W	In A	t°	75°	90 °	110°	120°
DMH 60/360.80 T	360	DN 80 - PN 10	3x230 V ~	2 1	1180 1100	535 465	1.82 1.55	m.c.a.	2	5	–	20
			3x400 V ~	3 2 1	1390 1350 1100	763 675 465	2.04 1.65 0.89					

MODEL	L	L1	L2	A	B	B1	B2	D	D1	D2	D3	D4	I	I1	I2	I3	M	H	H1	H2	WEIGHT kg
DMH 60/360.80 T	360	160	200	18	390	97	298	200	160	150	130	80	240	120	120	150	M14	480	240	240	72

DPH 120/360.80 T- WET ROTOR CIRCULATORS FOR HEATING AND AIR CONDITIONING SYSTEMS - TWIN, FLANGED

Pumped liquid temperature range: from -10 °C to +120 °C - **Maximum operating pressure:** 10 bar (1000 kPa)

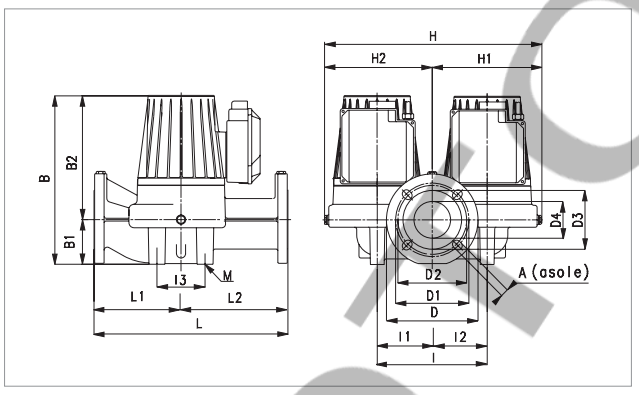

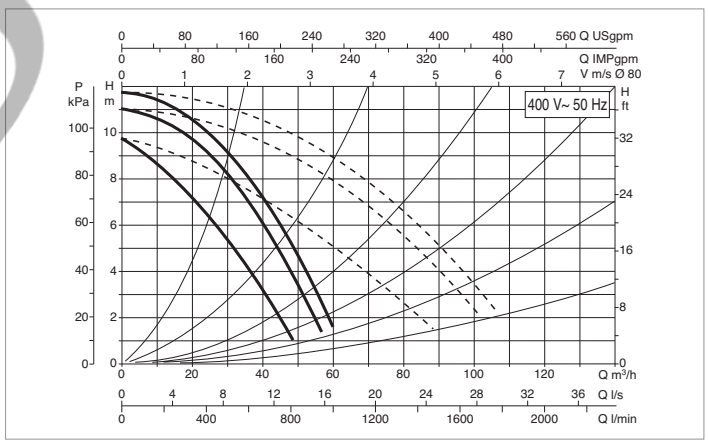

The performance curves are based on kinematic viscosity values = 1 mm²/s and density equal to 1000 kg/m³. Curve tolerance according to ISO 9906.

MODEL	CENTRE DISTANCE mm	FLANGES ON REQUEST	ELECTRICAL DATA					MINIMUM SUCTION PRESSURE				
			POWER INPUT 50 Hz	SPEED	REV. 1/min	P1 MAX W	In A	t°	75°	90 °	110°	120°
DPH 120/360.80 T	360	DN 80 - PN 10	3x230 V ~	2 1	2500 2340	1410 1292	3.95 3.6	m.c.a.	6	10	–	22
			3x400 V ~	3 2 1	2830 2780 2350	1820 1710 1302	3.3 2.93 2.13					

MODEL	L	L1	L2	A	B	B1	B2	D	D1	D2	D3	D4	I	I1	I2	I3	M	H	H1	H2	WEIGHT kg
DPH 120/360.80 T	360	160	200	18	390	97	298	200	160	150	130	80	240	120	120	150	M14	480	240	240	72

MOTORMOB

DPH 150/360.80 T - WET ROTOR CIRCULATORS FOR HEATING AND AIR CONDITIONING SYSTEMS - TWIN, FLANGED

Pumped liquid temperature range: from -10 °C to +110 °C - **Maximum operating pressure:** 10 bar (1000 kPa)

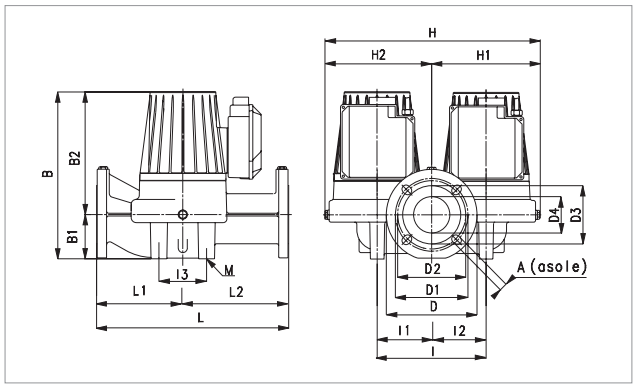

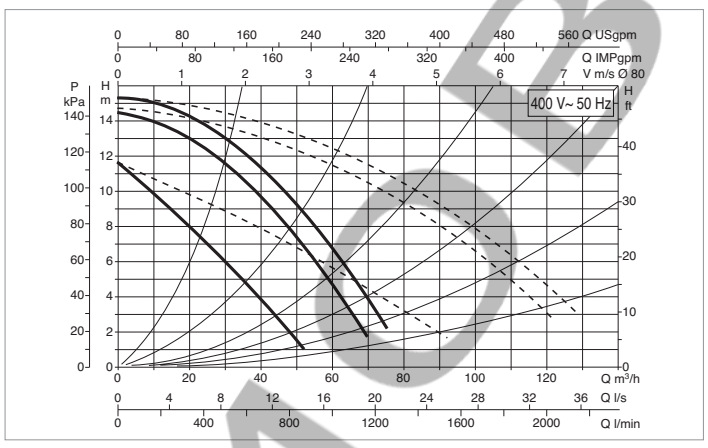

The performance curves are based on kinematic viscosity values = 1 mm²/s and density equal to 1000 kg/m³. Curve tolerance according to ISO 9906.

MODEL	CENTRE DISTANCE mm	FLANGES ON REQUEST	ELECTRICAL DATA					MINIMUM SUCTION PRESSURE				
			POWER INPUT 50 Hz	SPEED	REV. 1/min	P1 MAX W	In A	t°	75°	90 °	110°	120°
DPH 150/360.80 T	360	DN 80 - PN 10	3x230 V ~	2 1	2140 1900	1984 1695	5.62 4.82	m.c.a.	7	11	18	–
			3x400 V ~	3 2 1	2710 2610 1940	2870 2686 1710	4.64 4.32 2.85					

MODEL	L	L1	L2	A	B	B1	B2	D	D1	D2	D3	D4	I	I1	I2	I3	M	H	H1	H2	WEIGHT kg
DPH 150/360.80 T	360	160	200	18	390	97	298	200	160	150	130	80	240	120	120	150	M14	480	240	240	72

DPH 180/360.80 T - WET ROTOR CIRCULATORS FOR HEATING AND AIR CONDITIONING SYSTEMS - TWIN, FLANGED

Pumped liquid temperature range: from -10 °C to +110 °C - **Maximum operating pressure:** 10 bar (1000 kPa)

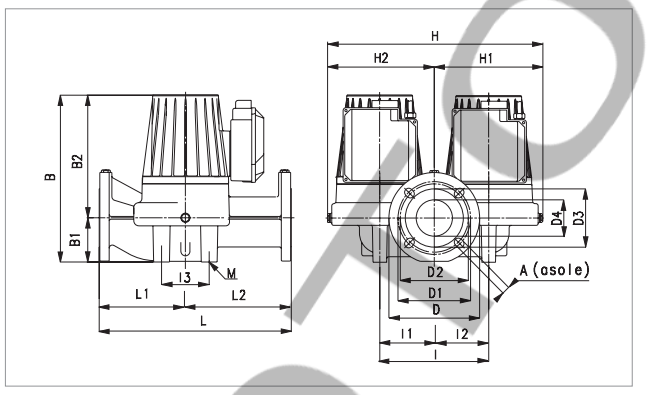

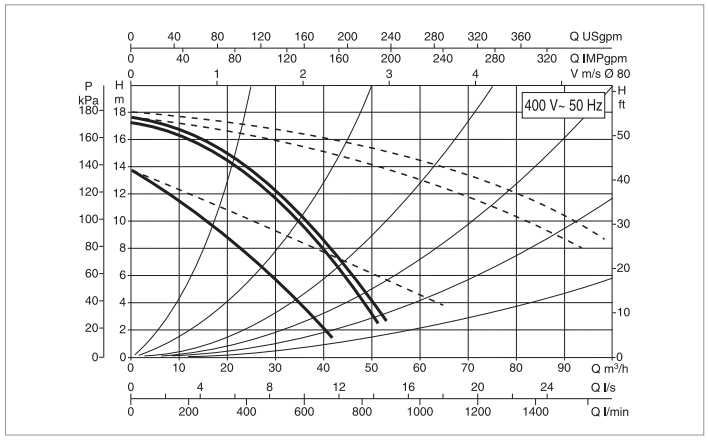

The performance curves are based on kinematic viscosity values = 1 mm²/s and density equal to 1000 kg/m³. Curve tolerance according to ISO 9906.

MODEL	CENTRE DISTANCE mm	FLANGES ON REQUEST	ELECTRICAL DATA					MINIMUM SUCTION PRESSURE				
			POWER INPUT 50 Hz	SPEED	REV. 1/min	P1 MAX W	In A	t°	75°	90 °	110°	120°
DPH 180/360.80 T	360	DN 80 - PN 10	3x230 V ~	2 1	2380 2170	1670 1490	4,7 4,25	m.c.a.	7	11	18	–
			3x400 V ~	3 2 1	2780 2700 2200	2310 2210 1490	4 3,5 2,4					

MODEL	L	L1	L2	A	B	B1	B2	D	D1	D2	D3	D4	I	I1	I2	I3	M	H	H1	H2	WEIGHT kg
DPH 180/360.80 T	360	160	200	18	390	97	298	200	160	150	130	80	240	120	120	150	M14	480	240	240	72

MOTOR-MOB